SHARP SERVICE MANUAL

No. S90K840LE814E

LCD COLOUR TELEVISION

MODELS
LC-40LE814E/RU
LC-46LE814E/RU
LC-40LE824E/RU
LC-46LE824E/RU

In the interests of user-safety (Required by safety regulations in some countries) the set should be restored to its original condition and only parts identical to those specified should be used.

OUTLINE

This Service Manual covers the differences from LC-40/46LE810E and LC-40/46LE820E.
For other technical information, refer to the LC-40/46LE810E, LC-40/46LX810E (No. S30E940LE810E) Service Manual and LC-40/46/52LE820E, LC-40/46LU820E (No. S30F240LE820E) Service Manual.

CONTENTS

OUTLINE AND DIFFERENCES FROM BASE MODEL
OUTLINE i
DIFFERENCES FROM BASE MODEL (LC-40LE814E/RU) i
DIFFERENCES FROM BASE MODEL (LC-46LE814E/RU) i
DIFFERENCES FROM BASE MODEL (LC-40LE824E/RU) ii
DIFFERENCES FROM BASE MODEL (LC-46LE824E/RU) ii

SAFETY PRECAUTION
IMPORTANT SERVICE SAFETY PRECAUTION iii
Precautions for using lead-free solder iv
End of life disposal v

OUTLINE
MAJOR SERVICE PARTS vi

CHAPTER 1. SPECIFICATIONS
[1] SPECIFICATIONS 1-1

CHAPTER 2. OPERATION MANUAL
[1] OPERATION MANUAL 2-1

CHAPTER 3. DIMENSIONS
[1] DIMENSIONS 3-1

CHAPTER 4. ADJUSTMENT
[1] ADJUSTMENT PROCEDURE 4-1

CHAPTER 5. TROUBLESHOOTING TABLE
[1] TROUBLESHOOTING TABLE 5-1
[2] LED flashing specification at the time of the error 5-14

CHAPTER 6. MAJOR IC INFORMATIONS
[1] MAJOR IC INFORMATIONS 6-1

CHAPTER 7. OVERALL WIRING/BLOCK DIAGRAM
[1] OVERALL WIRING DIAGRAM (LC-40LE814E/RU) 7-1
[2] OVERALL WIRING DIAGRAM (LC-46LE814E/RU) 7-2
[3] OVERALL WIRING DIAGRAM (LC-40LE824E/RU) 7-3
[4] OVERALL WIRING DIAGRAM (LC-46LE824E/RU) 7-4
[5] SYSTEM BLOCK DIAGRAM (LC-40LE814E/RU)(LC-46LE814E/RU) 7-5
[6] SYSTEM BLOCK DIAGRAM (LC-40LE824E/RU)(LC-46LE824E/RU) 7-6

Parts Guide

Parts marked with " ⚠ " are important for maintaining the safety of the set. Be sure to replace these parts with specified ones for maintaining the safety and performance of the set.

SHARP CORPORATION

This document has been published to be used for after sales service only.
The contents are subject to change without notice.

OUTLINE AND DIFFERENCES FROM BASE MODEL

OUTLINE

This Service Manual covers the differences from LC-40/46LE810E and LC-40/46LE820E.

For other technical information, refer to the LC-40/46LE810E, LC-40/46LX810E (No. S30E940LE810E) Service Manual and LC-40/46/52LE820E, LC-40/46LU820E (No. S30F240LE820E) Service Manual.

DIFFERENCES FROM BASE MODEL (LC-40LE814E/RU)

Ref No.	Description	LC-40LE810E (No. S30E940LE810E)	LC-40LE814E/RU (No. S90K840LE814E)	Interchangeability	Note
PRINTED WIRING BOARD ASSEMBLIES					
N	MAIN Unit	DKEYDF455FM03	DKEYDF455FM11	D	Changed
N	ICON Unit	DUNTKF493FM03	←	—	No change
N	R/C, LED Unit	DUNTKF494FM02	←	—	No change
N	POWER/LED CONTROL Unit	RUNTKA685WJQZ	←	—	No change
N	TOUCH SENSOR Unit	RUNTKA692WJQZ	←	—	No change
N	LCD CONTROL Unit	RUNTK4512TPZC	←	—	No change
LCD PANEL MODULE					
N	40” LCD Panel Module Unit	R1LK400D3LWF2Y	←	—	No change
CABINET PARTS					
Please refer to a Parts Guide					
SUPPLIED ACCESSORIES					
Please refer to a Parts Guide					
PACKING PARTS (NOT REPLACEMENT ITEM)					
Please refer to a Parts Guide					
SERVICE JIGS (USE FOR SERVICING)					
Please refer to a Parts Guide					

DIFFERENCES FROM BASE MODEL (LC-46LE814E/RU)

Ref No.	Description	LC-46LE810E (No. S30E940LE810E)	LC-46LE814E/RU (No. S90K840LE814E)	Interchangeability	Note
PRINTED WIRING BOARD ASSEMBLIES					
N	MAIN Unit	DKEYDF455FM03	DKEYDF455FM11	D	Changed
N	ICON Unit	DUNTKF493FM03	←	—	No change
N	R/C, LED Unit	DUNTKF494FM02	←	—	No change
N	POWER/LED CONTROL Unit	RUNTKA686WJQZ	←	—	No change
N	TOUCH SENSOR Unit	RUNTKA692WJQZ	←	—	No change
N	LCD CONTROL Unit	RUNTK4512TPZC	RUNTK4512TPZG	D	Changed
LCD PANEL MODULE					
N	46” LCD Panel Module Unit	R1LK460D3LWA2Y	R1LK460D3LWG2Y	D	Changed
CABINET PARTS					
Please refer to a Parts Guide					
SUPPLIED ACCESSORIES					
Please refer to a Parts Guide					
PACKING PARTS (NOT REPLACEMENT ITEM)					
Please refer to a Parts Guide					
SERVICE JIGS (USE FOR SERVICING)					
Please refer to a Parts Guide					

DIFFERENCES FROM BASE MODEL (LC-40LE824E/RU)

Ref No.	Description	LC-40LE820E (No. S30F240LE820E)	LC-40LE824E/RU (No. S90K840LE814E)	Interchangeability	Note
PRINTED WIRING BOARD ASSEMBLIES					
N	MAIN Unit	DKEYDF455FM01	DKEYDF455FM12	D	Changed
N	ICON Unit	DUNTKF493FM03	←	—	No change
N	LOGO Unit	DUNTKF493FM04	←	—	No change
N	R/C, LED Unit	DUNTKF494FM02	←	—	No change
N	POWER/LED CONTROL Unit	RUNTKA685WJQZ	←	—	No change
N	TOUCH SENSOR Unit	RUNTKA690WJQZ	RUNTKA761WJQZ	D	Changed
N	LCD CONTROL Unit	RUNTK4512TPZC	←	—	No change
LCD PANEL MODULE					
N	40” LCD Panel Module Unit	R1LK400D3LWF0Y	←	—	No change
CABINET PARTS					
Please refer to a Parts Guide					
SUPPLIED ACCESSORIES					
Please refer to a Parts Guide					
PACKING PARTS (NOT REPLACEMENT ITEM)					
Please refer to a Parts Guide					
SERVICE JIGS (USE FOR SERVICING)					
Please refer to a Parts Guide					

DIFFERENCES FROM BASE MODEL (LC-46LE824E/RU)

Ref No.	Description	LC-46LE820E (No. S30F240LE820E)	LC-46LE824E/RU (No. S90K840LE814E)	Interchangeability	Note
PRINTED WIRING BOARD ASSEMBLIES					
N	MAIN Unit	DKEYDF455FM01	DKEYDF455FM12	D	Changed
N	ICON Unit	DUNTKF493FM03	←	—	No change
N	LOGO Unit	DUNTKF493FM04	←	—	No change
N	R/C, LED Unit	DUNTKF494FM02	←	—	No change
N	POWER/LED CONTROL Unit	RUNTKA686WJQZ	←	—	No change
N	TOUCH SENSOR Unit	RUNTKA690WJQZ	RUNTKA761WJQZ	D	Changed
N	LCD CONTROL Unit	RUNTK4437TPZE	RUNTK4512TPZG	D	Changed
LCD PANEL MODULE					
N	46” LCD Panel Module Unit	R1LK460D3LWA0Y	R1LK460D3LWG0Y	D	Changed
CABINET PARTS					
Please refer to a Parts Guide					
SUPPLIED ACCESSORIES					
Please refer to a Parts Guide					
PACKING PARTS (NOT REPLACEMENT ITEM)					
Please refer to a Parts Guide					
SERVICE JIGS (USE FOR SERVICING)					
Please refer to a Parts Guide					

Interchangeability					
A:	Completely interchangeable	OLD = NEW	C:	Interchangeable from NEW to OLD	NEW → OLD
B:	Interchangeable from OLD to NEW	OLD → NEW	D:	Not interchangeable	NEW X OLD

SAFETY PRECAUTION

IMPORTANT SERVICE SAFETY PRECAUTION

■ **Service work should be performed only by qualified service technicians who are thoroughly familiar with all safety checks and the servicing guidelines which follow:**

■ WARNING

1. For continued safety, no modification of any circuit should be attempted.
2. Disconnect AC power before servicing.

CAUTION:
FOR CONTINUED PROTECTION AGAINST A RISK OF FIRE REPLACE ONLY WITH SAME TYPE FUSE.

40 inch model: F7000, F7001 (3.15A/250V)
46 inch model: F7000, F7001 (5A/250V)

■ BEFORE RETURNING THE RECEIVER (Fire & Shock Hazard)

Before returning the receiver to the user, perform the following safety checks:

3. Inspect all lead dress to make certain that leads are not pinched, and check that hardware is not lodged between the chassis and other metal parts in the receiver.
4. Inspect all protective devices such as non-metallic control knobs, insulation materials, cabinet backs, adjustment and compartment covers or shields, isolation resistor-capacitor networks, mechanical insulators, etc.
5. To be sure that no shock hazard exists, check for leakage current in the following manner.

- Plug the AC cord directly into a 220~240 volt AC outlet.
- Using two clip leads, connect a 1.5k ohm, 10 watt resistor paralleled by a 0.15μF capacitor in series with all exposed metal cabinet parts and a known earth ground, such as electrical conduit or electrical ground connected to an earth ground.
- Use an AC voltmeter having with 5000 ohm per volt, or higher, sensitivity or measure the AC voltage drop across the resistor.
- Connect the resistor connection to all exposed metal parts having a return to the chassis (antenna, metal cabinet, screw heads, knobs and control shafts, escutcheon, etc.) and measure the AC voltage drop across the resistor.
  All checks must be repeated with the AC cord plug connection reversed. (If necessary, a nonpolarized adaptor plug must be used only for the purpose of completing these checks.)
  Any reading of 1.05 V peak (this corresponds to 0.7 mA peak AC.) or more is excessive and indicates a potential shock hazard which must be corrected before returning the monitor to the owner.

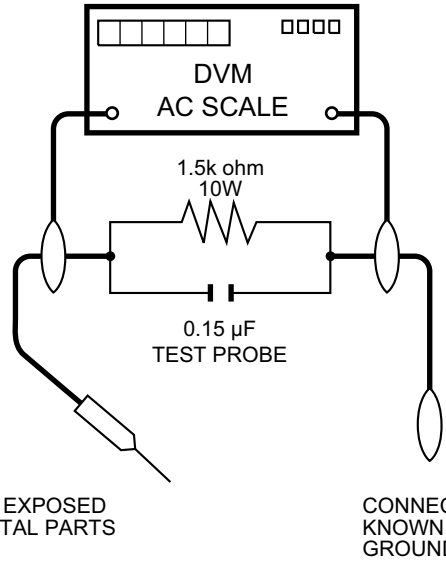

SAFETY NOTICE

Many electrical and mechanical parts in LCD colour television have special safety-related characteristics.

These characteristics are often not evident from visual inspection, nor can protection afforded by them be necessarily increased by using replacement components rated for higher voltage, wattage, etc.

Replacement parts which have these special safety characteristics are identified in this manual; electrical components having such features are identified by "⚠" and shaded areas in the Replacement Parts List and Schematic Diagrams.

For continued protection, replacement parts must be identical to those used in the original circuit.

The use of a substitute replacement parts which do not have the same safety characteristics as the factory recommended replacement parts shown in this service manual, may create shock, fire or other hazards.

Precautions for using lead-free solder

■Employing lead-free solder

- "PWBs" of this model employs lead-free solder. The LF symbol indicates lead-free solder, and is attached on the PWBs and service manuals. The alphabetical character following LF shows the type of lead-free solder.

  Example:

Indicates lead-free solder of tin, silver and copper.

Indicates lead-free solder of tin, silver and copper.

■Using lead-free wire solder

- When fixing the PWB soldered with the lead-free solder, apply lead-free wire solder. Repairing with conventional lead wire solder may cause damage or accident due to cracks.

  As the melting point of lead-free solder (Sn-Ag-Cu) is higher than the lead wire solder by 40 °C, we recommend you to use a dedicated soldering bit, if you are not familiar with how to obtain lead-free wire solder or soldering bit, contact our service station or service branch in your area.

■Soldering

- As the melting point of lead-free solder (Sn-Ag-Cu) is about 220 °C which is higher than the conventional lead solder by 40 °C, and as it has poor solder wettability, you may be apt to keep the soldering bit in contact with the PWB for extended period of time. However, Since the land may be peeled off or the maximum heat-resistance temperature of parts may be exceeded, remove the bit from the PWB as soon as you confirm the steady soldering condition.

  Lead-free solder contains more tin, and the end of the soldering bit may be easily corroded. Make sure to turn on and off the power of the bit as required.

  If a different type of solder stays on the tip of the soldering bit, it is alloyed with lead-free solder. Clean the bit after every use of it.

  When the tip of the soldering bit is blackened during use, file it with steel wool or fine sandpaper.

- Be careful when replacing parts with polarity indication on the PWB silk.

Lead-free wire solder for servicing

Part No.	★	Description	Code
ZHNDAi123250E	J	ϕ0.3mm 250g (1roll)	BL
ZHNDAi126500E	J	ϕ0.6mm 500g (1roll)	BK
ZHNDAi12801KE	J	ϕ1.0mm 1kg (1roll)	BM

End of life disposal

Attention: Your product is marked with this symbol. It means that used electrical and electronic products should not be mixed with general household waste. There is a separate collection system for these products.

A. Information on Disposal for Users (private households)

1. In the European Union

Attention: If you want to dispose of this equipment, please do not use the ordinary dust bin!

Used electrical and electronic equipment must be treated separately and in accordance with legislation that requires proper treatment, recovery and recycling of used electrical and electronic equipment.
Following the implementation by member states, private households within the EU states may return their used electrical and electronic equipment to designated collection facilities free of charge*. In some countries* your local retailer may also take back your old product free of charge if you purchase a similar new one.
*) Please contact your local authority for further details.

If your used electrical or electronic equipment has batteries or accumulators, please dispose of these separately beforehand according to local requirements.

By disposing of this product correctly you will help ensure that the waste undergoes the necessary treatment, recovery and recycling and thus prevent potential negative effects on the environment and human health which could otherwise arise due to inappropriate waste handling.

2. In other Countries outside the EU

If you wish to discard this product, please contact your local authorities and ask for the correct method of disposal.

For Switzerland: Used electrical or electronic equipment can be returned free of charge to the dealer, even if you don't purchase a new product. Further collection facilities are listed on the homepage of www.swico.ch or www.sens.ch.

B. Information on Disposal for Business Users

1. In the European Union

If the product is used for business purposes and you want to discard it:

Please contact your SHARP dealer who will inform you about the take-back of the product. You might be charged for the costs arising from take-back and recycling. Small products (and small amounts) might be taken back by your local collection facilities.

For Spain: Please contact the established collection system or your local authority for take-back of your used products.

2. In other Countries outside the EU

If you wish to discard of this product, please contact your local authorities and ask for the correct method of disposal.

The battery supplied with this product contains traces of Lead.

For EU: The crossed-out wheeled bin implies that used batteries should not be put to the general household waste! There is a separate collection system for used batteries, to allow proper treatment and recycling in accordance with legislation. Please contact your local authority for details on the collection and recycling schemes.

For Switzerland: The used battery is to be returned to the selling point.

For other non-EU countries: Please contact your local authority for correct method of disposal of the used battery.

OUTLINE

MAJOR SERVICE PARTS

■PWB UNIT

Ref No.	Parts Code	Description
N	DKEYDF455FM11	MAIN Unit (LC-40LE814E/RU)(LC-46LE814E/RU) (*1)
N	DKEYDF455FM12	MAIN Unit (LC-40LE824E/RU)(LC-46LE824E/RU) (*1)
N	DUNTKF493FM03	ICON Unit
N	DUNTKF493FM04	LOGO Unit (LC-40LE824E/RU)(LC-46LE824E/RU)
N	DUNTKF494FM02	R/C, LED Unit
N	RUNTKA685WJQZ	POWER/LED CONTROL Unit (LC-40LE814E/RU)(LC-40LE824E/RU)
N	RUNTKA686WJQZ	POWER/LED CONTROL Unit (LC-46LE814E/RU)(LC-46LE824E/RU)
N	RUNTKA692WJQZ	TOUCH SENSOR Unit (LC-40LE814E/RU)(LC-46LE814E/RU)
N	RUNTKA761WJQZ	TOUCH SENSOR Unit (LC-40LE824E/RU)(LC-46LE824E/RU) (*2)
N	RUNTK4512TPZC	LCD CONTROL Unit (LC-40LE814E/RU)(LC-40LE824E/RU)
N	RUNTK4512TPZG	LCD CONTROL Unit (LC-46LE814E/RU)(LC-46LE824E/RU)

NOTE: (*1) Replace MAIN Unit (DKEYDF455FM11, DKEYDF455FM12) in case of IC8401 or IC3302 failure.

(*2) TOUCH SENSOR Unit (RUNTKA761WJQZ) reuse will be impossible, once it is stuck on front cabinet and exfoliates.

Therefore, please exchange of a TOUCH SENSOR Unit in the case of front cabinet exchange.

■OTHER UNIT

Ref No.	Parts Code	Description
N	R1LK400D3LWF2Y	40" LCD Panel Module Unit (LC-40LE814E/RU)
N	R1LK460D3LWG2Y	46" LCD Panel Module Unit (LC-46LE814E/RU)
N	R1LK400D3LWF0Y	40" LCD Panel Module Unit (LC-40LE824E/RU)
N	R1LK460D3LWG0Y	46" LCD Panel Module Unit (LC-46LE824E/RU)

■IC FOR EXCLUSIVE USE OF THE SERVICE

Ref No.	Parts Code	Description	Q'ty
IC501	RH-iXD108WJQZS	IC (EDID for PC)	1
IC2002	RH-iXC786WJNJQ	IC (Monitor MICON)	1

■SERVICE JIGS

Ref No.	Parts Code	Description	Q'ty
N	QCNW-G616WJQZ	Main Unit to LCD Control Unit (LW)	1
N	QCNW-G625WJQZ	LCD Control Unit to Power Unit (PL)	1
N	QCNW-H184WJQZ	Main Unit to Power Unit (PD)	1
N	QCNW-H185WJQZ	Main Unit to Power Unit (LB)	1
N	QCNW-K594WJQZ	Main Unit to R/C, LED Unit (RA)	1
N	QCNW-K595WJQZ	Main Unit to Speaker (SP)	1
N	QCNW-K596WJQZ	Main Unit to LOGO Unit (RL) (LC-40LE824E/RU)(LC-46LE824E/RU)	1
N	QCNW-K597WJQZ	Main Unit to Woofer (SB)	1

CHAPTER 1. SPECIFICATIONS

[1] SPECIFICATIONS

Item			LCD COLOUR TV (40”/102 cm), LC-40LE824E, LC-40LE824RU, LC-40LE814E, LC-40LE814RU	LCD COLOUR TV (46”/117 cm), LC-46LE824E, LC-46LE824RU, LC-46LE814E, LC-46LE814RU
LCD panel			102 cm (40”) X-Gen panel	117 cm (46”) X-Gen panel
Resolution			1,920 x 1,080 x 4 dots	
Video colour system			PAL/SECAM/NTSC 3.58/NTSC 4.43/PAL 60	
TV function	TV-standard	Analogue	CCIR (B/G, I, D/K, L/L’)	
		Digital	DVB-T (2K/8K OFDM), DVB-C, DVB-S/S2	
	Receiving channel	VHF/UHF	IR A ch–E69 ch (Digital), E2–E69 ch, F2–F10 ch, I21–I69 ch, IR A–IR J ch	
		CATV	Hyper-band, S1 – S41 ch	
		Satellite	950 – 2150 MHz*3	
	TV-tuning system		Auto Preset 999 ch (non-Nordic [DTV]), Auto Preset 9999 ch (Nordic [DTV]), Auto Preset 99 ch (ATV), Auto Label, Auto Sort, Auto P reset 9999 ch (SAT)	
	STEREO/BILINGUAL		NICAM/A2	
Audio amplifier			10 W x 2/15 W x 1	
Speaker			(234 mm x 22 mm) x 2/Ø 120 mm	
Terminals	Antenna		UHF/VHF 75Ω Din type (analogue & digital), Satellite 75Ω F type (DVB-S/S2)	
	RS-232C		D-Sub 9 pin male connector	
	EXT 1		SCART (AV input, Y/C input, RGB input, TV output)	
	EXT 2		RCA pin (AV input/AUDIO L/R)	
	EXT 3		15 pin mini D-sub	
	HDMI 1 (EXT 4)		HDMI (ARC)	
	HDMI 2 (EXT 5)		HDMI	
	HDMI 3 (EXT 6)		HDMI	
	HDMI 4 (EXT 7)		HDMI	
	USB		USB	
	ETHERNET (10/100)		Network connector	
	HDMI 2/EXT 3 AUDIO (L/R)		Ø 3.5 mm jack*1	
	DIGITAL AUDIO OUTPUT		Optical S/PDIF digital audio output	
	C. I. (Common Interface)		EN50221, R206001, CI Plus specification	
	OUTPUT/Headphones		RCA pin (AUDIO R/L)/Ø 3.5 mm jack (audio output)	
OSD language			Czech, Danish, Dutch, English, Estonian, Finnish, French, German, Greek, Hungarian, Italian, Latvian, Lithuanian, Norwegian, Polish, Portuguese, Russian, Slovak, Slovene, Spanish, Swedish, Turkish, Ukrainian	
Power requirement			AC 220–240 V, 50 Hz	
Power consumption (method IEC62087)		824 models	127 W (0.2 W standby*2)	147 W (0.2 W standby*2)
		814 models	127 W (0.2 W standby*2)	147 W (0.2 W standby*2)
Weight		824 models	19.5 kg (without stand), 23.5 kg (with stand)	24.5 kg (without stand), 30.0 kg (with stand)
		814 models	16.0 kg (without stand), 19.5 kg (with stand)	20.5 kg (without stand), 26.0 kg (with stand)
Operating temperature			0 °C to + 40 °C	

*1 The HDMI 2 and EXT 3 terminals can both use the same audio input terminal.
*2 Standby power consumption applies when the TV is set to not receive EPG data.
*3 The satellite channel’s frequency may vary according to satellites and antennas.

- As a part of our policy of continuous improvement, SHARP reserves the right to make design and specification changes for product improvement without prior notice. The performance specification figures indicated are nominal values of production units. There may be some deviations from these values in individual units.

CHAPTER 2. OPERATION MANUAL

[1] OPERATION MANUAL

TV (front view)

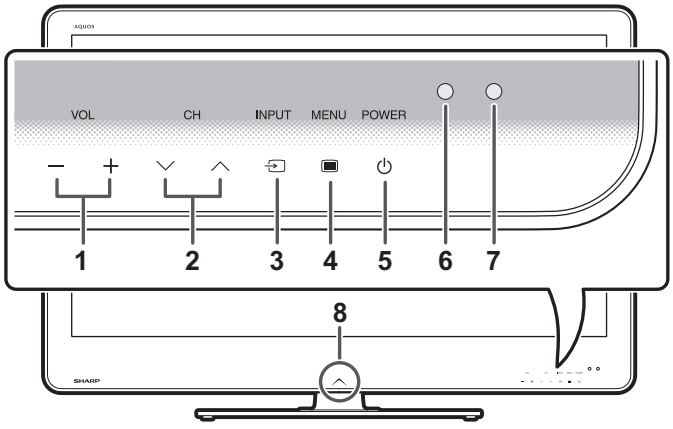

1 **VOL** −/+ (Volume buttons)
2 **CH** ∨/∧ (Programme [channel] buttons)
3 **INPUT** (Input source button)
4 **MENU** (Menu button)
5 **POWER** (Power button)
6 OPC sensor
7 Remote control sensor
8 Illumination LED

TV (rear view)

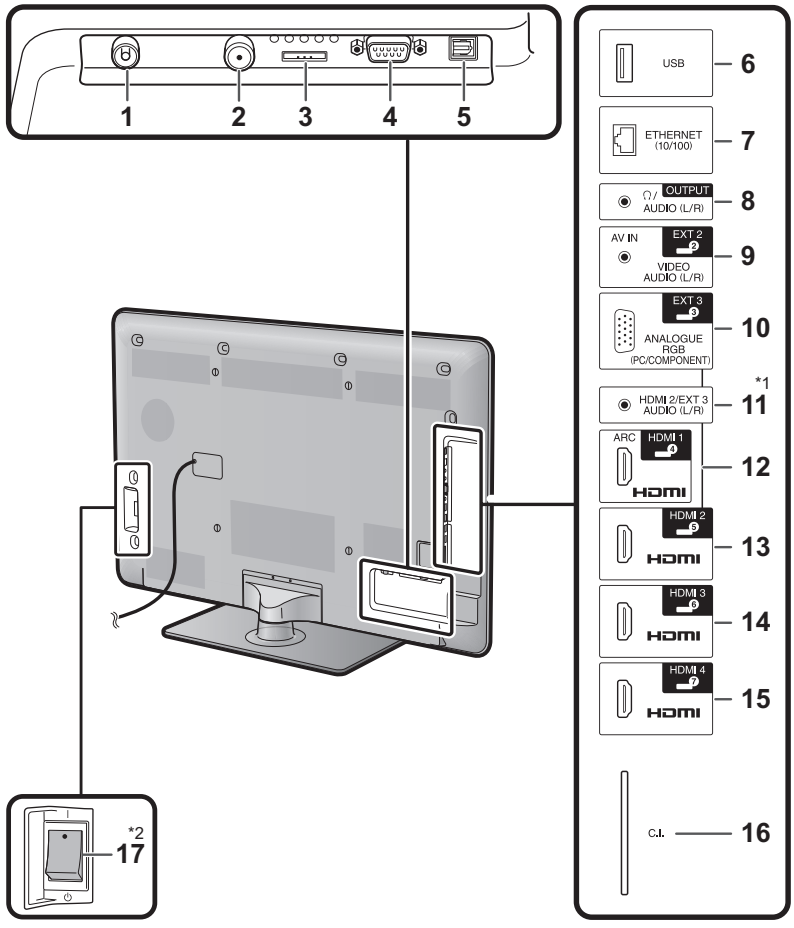

1 Antenna terminal
2 Satellite antenna terminal
3 EXT 1 (RGB) terminal
4 RS-232C terminal
5 DIGITAL AUDIO OUTPUT terminal
6 USB terminal
7 ETHERNET (10/100) terminal
8 OUTPUT (Headphones/AUDIO (L/R)) terminal
9 EXT 2 (AV IN/VIDEO/AUDIO (L/R)) terminal
10 EXT 3 (ANALOGUE RGB (PC/COMPONENT)) terminal
11 HDMI 2/EXT 3 AUDIO (L/R) jack
12 HDMI 1 (HDMI/ARC) terminal
13 HDMI 2 (HDMI) terminal
14 HDMI 3 (HDMI) terminal
15 HDMI 4 (HDMI) terminal
16 C.I. (COMMON INTERFACE) slot
17 MAIN POWER switch

WARNING

- Excessive sound pressure from earphones and headphones can cause hearing loss.
- Do not set the volume at a high level. Hearing experts advise against extended listening at high volume levels.

*1 The HDMI 2 and EXT 3 terminals can both use the same audio input terminal (HDMI 2/EXT 3 AUDIO (L/R)). However, the proper item must be selected in the “Audio select” menu.
*2 When the MAIN POWER switch is turned off (⏻), the amount of electric power consumed will be reduced to 0.01 W or less. However, unlike when unplugging the AC cord, the power is not completely disconnected.

Remote control unit

1 **TV ⏻ (Standby/On)**

2 **ATV**
Press to access conventional analogue TV mode.

DTV
Press to access digital TV mode.

SAT
Press to access satellite mode.

RADIO
DTV/SAT: Switch between radio and data mode.
- When only data broadcasting (no radio broadcasting) is transmitted by DVB, the radio broadcasting will be skipped.

3 **AQUOS LINK buttons**
If external equipment such as a AQUOS BD player is connected via HDMI cables and is AQUOS LINK compatible, you can use these AQUOS LINK buttons.

- The four buttons (◀◀, ▶, ▶▶, ■) function during time shift (for the 824 model series), Home Network and Net TV.

4 **CONTROL**
Press to display the panel to operate some functions on the screen.

5 **TIME SHIFT (READY/↶ / II / ↷)**
Press to temporarily record a programme you are watching if you want to interrupt a programme to answer a phone call, for example.

- This function is available only for the 824 model series.

6 **Numeric buttons 0–9**
Set the channel.
Enter desired numbers.
Set the page in teletext mode.
- When the five Nordic countries (Sweden, Norway, Finland, Denmark or Iceland) are selected in the country setting from “Auto installation”, DTV services are four digits. When another country is selected, DTV services are three digits.

7 **⇆ (Flashback)**
Press to return to the previously selected channel or external input.

8 **I/II/I+II ▽/○ (Sound mode)**
Select a sound multiplex mode.

(Wide mode)
Select a wide mode.

LE824E

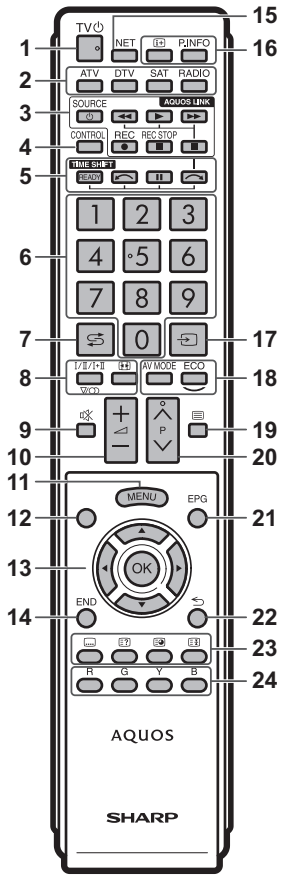

LE814E

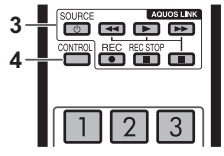

9 **(Mute)**
TV sound on/off.

10 **◿ +/− (Volume)**
Increase/decrease TV volume.

11 **MENU**
“Menu” screen on/off.

12 **None**
This key does not work on this model.

13 **▲/▼/◀/▶ (Cursor)**
Select a desired item.

OK
Execute a command.
ATV/DTV/SAT: Display “CH list” when no other “Menu” screen is running.

14 **END**
ATV/DTV/SAT: Exit the “Menu” screen.
NET: Return to the start page.

15 **NET**
Press to access Net TV.

16 **(Display information)**
Press to display the station information (channel number, signal, etc.) in the upper right corner of the screen.

P. INFO
Press to display programme information transmitted through digital video broadcasting (DTV/SAT only).

17 **(INPUT)**
Select an input source.

18 **AV MODE**
Select a video setting.

ECO (Standard/Advanced/Off)
Select “Energy save” setting.

19 **(Teletext)**
ATV: Display analogue teletext.

DTV/SAT: Select MHEG-5 or teletext for DTV/SAT.

20 **P ∧/∨**
ATV/DTV/SAT: Select the TV channel.
NET: Scrolls pages up/down.

21 **EPG**
DTV/SAT: Display the EPG screen.

22 **⮌(Return)**
ATV/DTV/SAT: Return to the previous “Menu” screen.
NET: Return to the previous page (This may not function for some services).

23 **Buttons for useful operations**

(Subtitle)
Switch subtitle languages on/off.

(Reveal hidden teletext)

(Subpage)

(Freeze/Hold)
Press to freeze a moving image on the screen.
Teletext: Stop updating teletext pages automatically or release the hold mode.

24 **R/G/Y/B (Colour) buttons**
The coloured buttons are correspondingly used to select the coloured items on the screen (e.g., EPG, MHEG-5, teletext).

Attaching the stand unit

- Before performing work, spread cushioning over the surface on which you will be laying the TV. This will prevent it from being damaged.

CAUTION

- **Attach the stand in the correct direction.**
- **Be sure to follow the instructions. Incorrect installation of the stand may result in the TV falling over.**

1 Confirm that there are nine screws (four long screws and five short screws) with the stand unit.

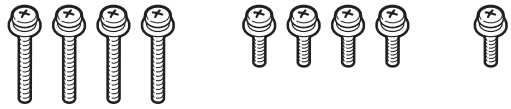

2 Attach the supporting post for the stand unit onto the base using the four long screws with a screwdriver as shown.

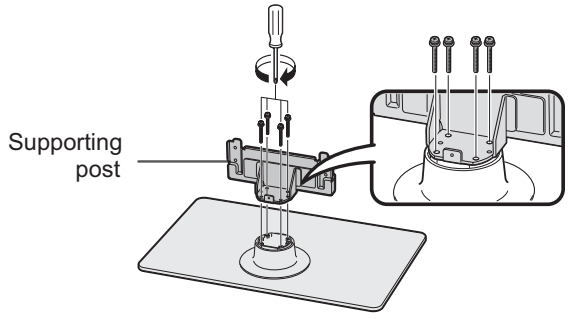

3 Insert the stand into the openings on the bottom of the TV (hold the stand so it will not drop from the edge of the base area).

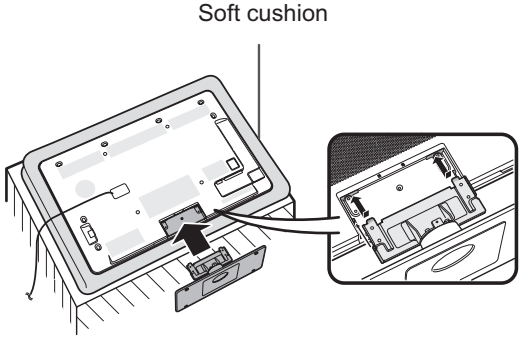

4 Insert and tighten four short screws into the four holes on the rear of the TV.

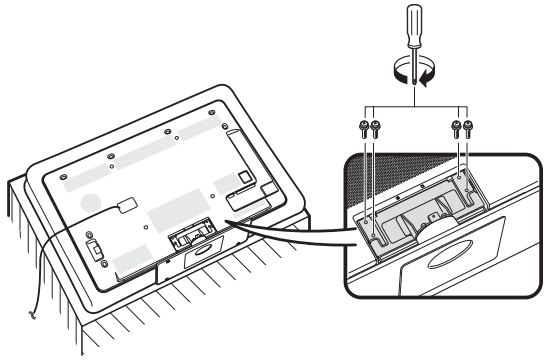

5 Attaching the stand cover.

① Slide the stand cover into the two catches on the stand base.

② Insert and tighten a short screw into the hole on the centre of the stand cover.

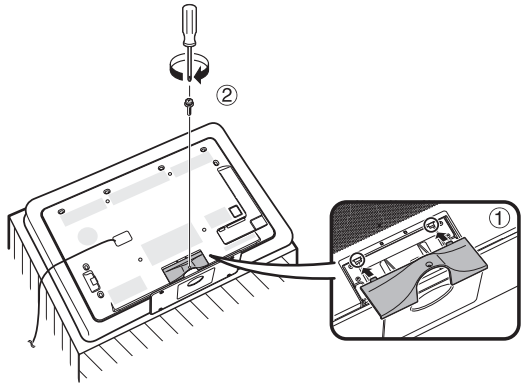

NOTE

- To detach the stand unit, perform the steps in reverse order.
- A screwdriver is not supplied with this product.
- The stand base is made of glass. Therefore, be careful not to drop the stand base or apply pressure to it.
- Do not place heavy objects on the stand base.

CAUTION

The stand is made of tempered glass. Read the following precautionary instructions carefully and use it properly.

- Do not drop or place unnecessary stress on the stand when assembling and attaching or removing it.
- Be sure to not accidentally hit the glass part of the stand with a sharp or hard object, as it may cause the glass to break.
- Using tempered glass with scratches for extended periods may lead to damage occurring. If there are scratches on the tempered glass, do not attempt to use the stand.

CHAPTER 3. DIMENSIONS

[1] DIMENSIONS

Unit: inch (mm)

LC-46LE824E LC-46LE824RU
LC-40LE824E LC-40LE824RU

( ) : LC-46LE824E LC-46LE824RU
[ ] : LC-40LE824E LC-40LE824RU

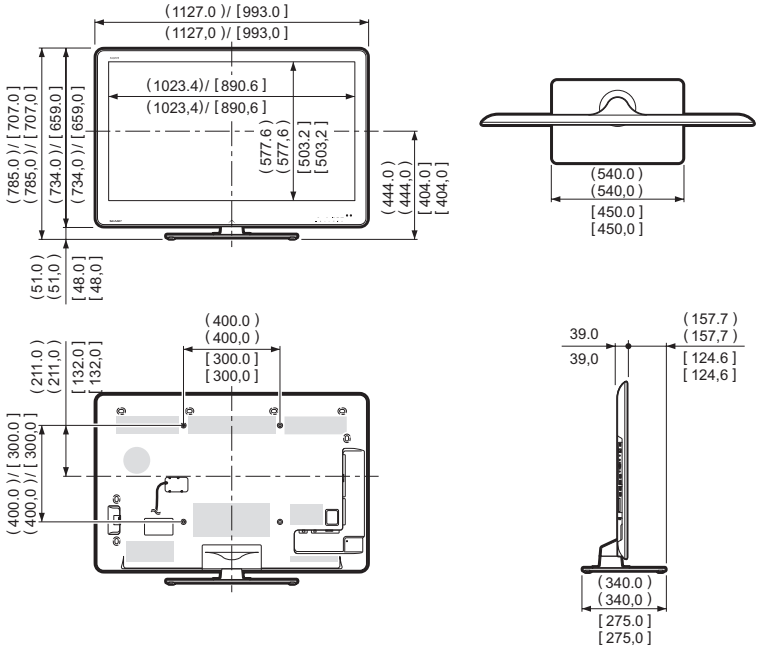

LC-46LE814E LC-46LE814RU
LC-40LE814E LC-40LE814RU

( ) : LC-46LE814E LC-46LE814RU
[ ] : LC-40LE814E LC-40LE814RU

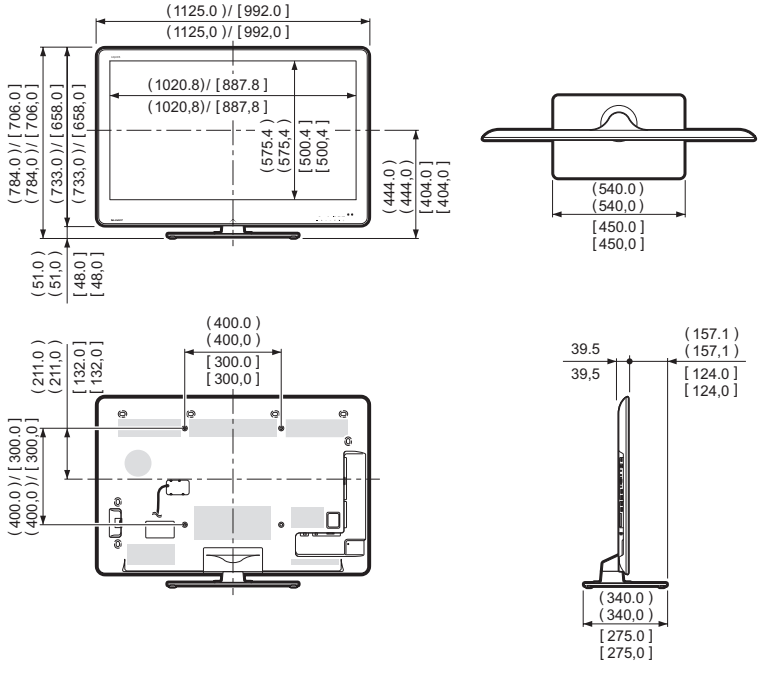

NOTE

- Dimensions do not include protrusions such as screws and some parts.

CHAPTER 4. ADJUSTMENT

[1] ADJUSTMENT PROCEDURE

1. Adjustment method after PWB and/or IC replacement due to repair

The unit is set to the optimum at the time of shipment from the factory.

If any value should become improper or any adjustment is necessary due to the part replacement, make an adjustment according to the following procedure.

1. Procure the following units in order to replace the main unit

   MAIN UNIT: DKEYDF455FM11 (LC-40LE814E/RU, LC-46LE814E/RU)
   DKEYDF455FM12 (LC-40LE824E/RU, LC-46LE824E/RU)

NOTE: [Caution when replacing ICs in the main unit (IC501, IC2002)]

The above ICs are EEPROMs storing the EDID data of PC, and Monitor microcomputer.

Before replacing the relevant part, procure the following parts in which the data have been rewritten.

IC501	RH-iXD108WJQZS	PC EDID
IC2002	RH-iXC786WJNJQ	Monitor microcomputer

NOTE: [Caution when replacing ICs in the main unit (IC8401, IC3302)]

When replacing either IC8401 or IC3302, exchange MAIN units for DKEYDF455FM11/12

Each part should not be individually exchanged.

IC8401	RH-iXD047WJQZQ	Flash
IC3302	RH-iXC951WJN1Q	Main CPU

NOTE: HDMI ROM Writing

After replacing IC1504, execute “HDMI EDID WRITE” on the page 5/21

Please execute it after checking MODEL NAME & INCH SIZE. are correct.

IF MODEL NAME & INCH SIZE. are not correct, set them previously. (Refer to 2)

The ROM data based on information of MODEL NAME & INCH SIZE

1) Enter the process adjustment mode in TV.
2) Use the cursor keys (▲/▼) and CH keys (∧ / ∨) of R/C to select the item [HDMI EDID WRITE] on the page 5/21.

2. After replacing the LCD panel or LCD control/MAIN UNIT, check MODEL NAME in the following procedure.
   1) Enter the process adjustment mode in TV.
   2) Use the cursor keys (▲/▼) and CH keys (∧ / ∨) of R/C to select the item [MODEL NAME] on the page 21/21.
   3) Verify that the Model name is displayed.
   4) If the Model name doesn't match, select the values of the Model name with the VOL keys (+/-).
   5) After selection in Step 4), press the OK key, and it is completed with OK displayed.
   6) Use the cursor keys (▲/▼) and CH keys (∧ / ∨) of R/C to select the item [PANEL_SIZE] on the page 21/21.
   7) Verify that the panel size is displayed.
   8) If the size doesn't match, select the values of the panel size with the VOL keys (+/-).
   9) After selection in Step 8), press the OK key, and it is completed with OK displayed.

3. After replacing the LCD panel or LCD control PWB, adjust the VCOM in the following procedure.
   1) Enter the process adjustment mode.
   2) Use the cursor keys (▲/▼) and CH keys (∧ / ∨) of R/C to select the item [VCOM ADJ] on the page 10/21.
   3) Press the OK key to verify that the adjustment pattern is displayed.
   4) Use VOL keys (+/-) of R/C to adjust the flicker in the center of the screen to minimum.
   5) When the optimal state is achieved in Step 4, press the OK key to turn the pattern to OFF.

2. Notes of Touch sensor unit (LC-40LE824E/RU, LC-46LE824E/RU)

Touch sensor unit (RUNTKA761WJQZ) is fixed directly in the module glass.

The unit cannot never be recycled when exfoliated from the module glass.

Therefore, please exchange the touch sensor units when the module glass is changed.

Please note the adhesion and mixing of dust for the module glass when the module glass and the touch sensor unit are exchanged.

Module glass for LE824
40inch: CPNLHA019WE14
46inch: CPNLHA020WJ12

3. Method of shuts down for Power supply

Please execute the following procedures to shut down Power supply from the state of normal operation.

1) Keep touching the power supply key on the set for 5 seconds from the state of watching.
   * The screen disappears when power supply key is touched, but Keep pushing the power supply key.
2) A central icon lights between 500ms when the power supply shuts down.
   Please separate the finger from the power supply key when lighting of a central icon is confirmed

4. Entering and exiting the adjustment process mode

Please execute the following procedures to enter the adjustment process mode when the power supply shuts down.

1) While holding down the “VOL (-)” and “INPUT” keys on the set at once, touch the power supply key on the set.
   Please separate the fingers from key on the set when boot-up is confirmed with lighting of a central icon etc.
   After a while, The letter “K” appears on the screen. This state is in **Inspection mode.**
2) Next, hold down the “VOL (-)” and “CH (∨)” keys on the set at once.
   Multiple lines of blue characters appearing on the screen indicate that the set is now in **the adjustment Process mode.**
   If you fail to enter the adjustment process mode (the display is the same as normal startup), retry the procedure.
3) To exit the adjustment process mode after the adjustment is done, unplug the AC power cord to force off the power.
   (When the power is turned off with the remote controler, once unplug the AC power cord and plug it in again. In this case, wait for 10 seconds or so after unplugging.)

CAUTION: Use due care in handling the information described here lest the users should know how to enter the adjustment process mode.
If the settings are tampered with in this mode, unrecoverable system damage may result.

5. Remote controler key operation and description of display in adjustment process mode.

1. Key operation

Remote controler key	Main unit key	Remote controler key Main unit key Function
CH keys (∧ / ∨)	CH (∧ / ∨)	Moving an item (line) by one (UP/DOWN)
VOL keys (+/-)	VOL (+/-)	Changing a selected item setting (+1/-1)
Cursor (▲/▼)	—	Turning a page (PREVIOUS/NEXT)
Cursor (◄/►)	—	Changing a selected line setting (+10/-10)
INPUT	INPUT	Input source switching (toggle switching) (TV→DTV, Input1~7)
OK	—	Executing a function
RETURN	—	Returning to a present page

Input mode is switched automatically when relevant adjustment is started so far as the necessary input signal is available.

6. Description of display

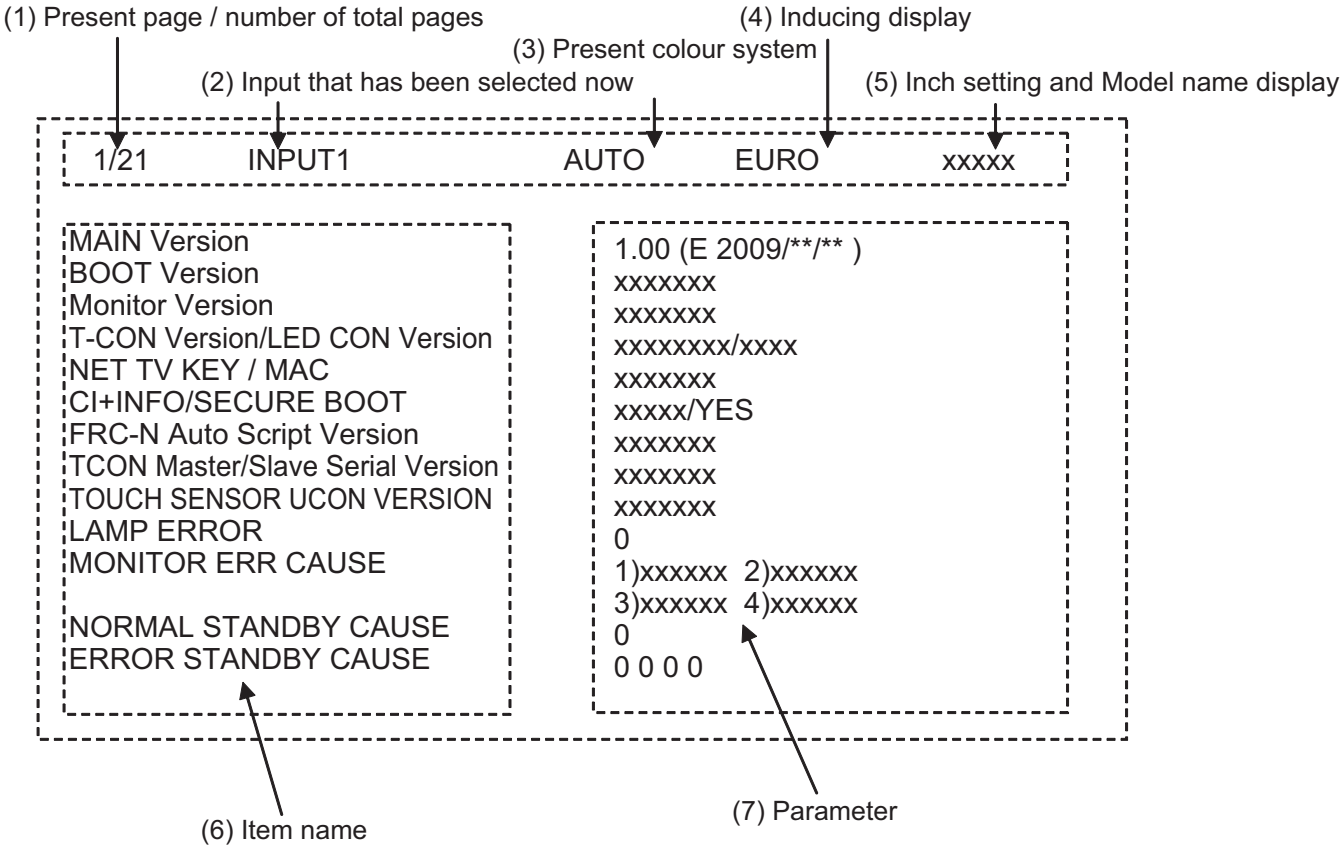

No.	Description	Display specification
(1)	Present page/number of total pages	2char/2char Decimal Number mark.
(2)	Input that has been selected now	TUNER/DTV/INPUT1/INPUT2/INPUT3/INPUT5/INPUT6/INPUT7
(3)	Present colour system	AUTO/N358/N443/PAL/SECAM/480i/580i/1080i/50 etc. ···
(4)	Inducing display	EUROPE/RUSSIA/SWEDEN
(5)	Inch setting and Model name display	Inch setting and Model name display
(6)	Item name	Max. 30 char
(7)	Parameter	Max. 60 char

7. Adjustment process mode menu

The character string in brackets [ ] will appear as a page title in the adjustment process menu header.

Page	Line	Item	Description	Remarks (adjustment detail, etc.)
1/21				
	1	MAIN Version	1xxx (xxxxx)	Main software version
	2	BOOT Version	xxxxxxx	BOOT Version.
	3	Monitor Version	xxxxxxx	Monitor software version
	4	T-CON Version/LED CON Version	xxxxxxxx/xxxx	T-CON/LED CON Version
	5	NET TV KEY / MAC	xxxxxxx	NET TV KEY / MAC Address
	7	CI+INFO/SECURE BOOT	xxxxx/YES	CI+ Key Information/SECURE BOOT
	8	FRC-N Auto Script Version	xxxxxxx	
	9	TCON Master/Slave Serial Version	xxxxxxx	
	10	TOUCH SENSOR UCON VERSION	xxxxxxx	
	11	LAMP ERROR	0	Number of termination due to lamp error.
	12	MONITOR ERR CAUSE	1) xxxxxx 2) xxxxxx 3) xxxxxx 4) xxxxxx	Last error standby cause.
	13	NORMAL STANDBY CAUSE	0	Situation that became standby at the end. (Excluding the error)
	14	ERROR STANDBY CAUSE	0 0 0 0	Error standby cause
2/21				
	1	INDUSTRY INIT	Enter	Initialization to factory settings execution.
	2	INDUSTRY INIT (-Public)	OFF	Initialization to factory settings execution. (Public mode is excluded)
	3	PUBLIC MODE	OFF	Public mode ON/OFF setting
	4	Center Acutime	—	Main operating hours.
	5	RESET	OFF	Main operating hours reset.
	6	Backlight Acutime	—	Backlight operating hours.
	7	RESET	OFF	Backlight operating hours reset.
	8	LAMP ERROR RESET	OFF	Lamp error reset.
	9	ADJ PARAM SET	Enter	ADJ PARAM SET
	10	VIC XPOS	0	X-coordinate setting for VIC READ
	11	VIC YPOS	0	Y-coordinate setting for VIC READ
	12	VIC SIGNAL TYPE	MAIN	Signal type setting for VIC READ
	13	VIC READ	OFF	Picture level acquisition function (Level appears in green on the upper right)
3/21				
	1	TUNER ADJ	Enter	TUNER auto adjustment execution
	2	PAL+TUNER ADJ	Enter	PAL TUNER auto adjustment execution
	3	TUNER ADJ (SMPTE)	Enter	TUNER auto adjustment execution (SMPTE)
	4	PAL+TUNER ADJ (SMPTE)	Enter	PAL TUNER auto adjustment execution (SMPTE)
	5	TUNER ADJ (SMPTE CH57)	Enter	TUNER auto adjustment execution (SMPTE CH57)
	6	PAL+TUNER ADJ (SMPTE CH57)	Enter	PAL TUNER auto adjustment execution (SMPTE CH57)
	7	TUNER CONTRAST A_GAIN	16	TUNER signal level adjustment
	8	TUNER CONTRAST D_GAIN	2073	TUNER signal level adjustment
	9	TUNER CONTRAST OFFSET	256	TUNER signal level adjustment
4/21				
	1	PAL ADJ	Enter	PAL adjustment
	2	SECAM ADJ	Enter	SECAM adjustment
	3	N358 ADJ	Enter	N358 adjustment
	4	PAL CONTRAST A_GAIN	14	PAL contrast adjustment
	5	PAL CONTRAST D_GAIN	2149	PAL contrast adjustment
	6	PAL CONTRAST OFFSET	255	PAL contrast adjustment
	7	SECAM CONTRAST A_GAIN	14	SECAM contrast adjustment
	8	SECAM CONTRAST D_GAIN	2123	SECAM contrast adjustment
	9	SECAM CONTRAST OFFSET	256	SECAM contrast adjustment
	10	N358 CONTRAST A_GAIN	14	N358 contrast adjustment
	11	N358 CONTRAST D_GAIN	2192	N358 contrast adjustment
	12	N358 CONTRAST OFFSET	255	N358 contrast adjustment

Page	Line	Item	Description	Remarks (adjustment detail, etc.)
5/21				
	1	HDMI CEC TEST	Enter	HDMI CEC test
	2	INSPECT USB TERM	Enter	Reading inspection of USB memory terminal
	3	HDMI EDID WRITE	Enter	HDMI EDID WRITING
	4	MONIDATA READ [TEMP/OPC]	OFF	MONITOR Temperature/OPC Acquisition tool.
	5	CAUSE RESET	Enter	Reset of standby cause
	6	SD CARD TEST	Size 1	SD CARD TEST (*This item is LC-40/46LE824E/RU only)
	7	SD CARD REC SIZE	xx	SD CARD REC SIZE (*This item is LC-40/46LE824E/RU only)
	8	RESET	OFF	SD CARD RESET (*This item is LC-40/46LE824E/RU only)
6/21				
	1	COMP15K ALL ADJ	Enter	Component 15K picture level adjustment
	2	COMP15K MAIN Y GAIN	141	Y GAIN adjustment value
	3	COMP15K MAIN CB GAIN	150	Cb GAIN adjustment value
	4	COMP15K MAIN CR GAIN	150	Cr GAIN adjustment value
	5	COMP15K Y OFFSET	64	Y OFFSET adjustment value
	6	COMP15K CB OFFSET	128	Cb OFFSET adjustment value
	7	COMP15K CR OFFSET	128	Cr OFFSET adjustment value
7/21				
	1	HDTV ADJ	Enter	HDTV video level adjustment
	2	HDTV Y GAIN	141	HDTV Y GAIN adjustment value
	3	HDTV CB GAIN	150	HDTV Cb adjustment value
	4	HDTV CR GAIN	150	HDTV Cr adjustment value
	5	HDTV Y OFFSET	64	HDTV Y OFFSET adjustment value
	6	HDTV CB OFFSET	128	HDTV Cb OFFSET adjustment value
	7	HDTV CR OFFSET	128	HDTV Cr OFFSET adjustment value
8/21				
	1	ANALOG PC ADJ	Enter	DVI ANALOG video level adjustment
	2	R OFFSET	64	R CUTOFF adjustment value
	3	G OFFSET	64	G CUTOFF adjustment value
	4	B OFFSET	64	B CUTOFF adjustment value
	5	R GAIN	44	R DRIVE adjustment value
	6	G GAIN	44	G DRIVE adjustment value
	7	B GAIN	44	B DRIVE adjustment value
9/21				
	1	SCART RGB ADJ	Enter	SCART RGB level adjustment
	2	SCART RGB ADJ (FASTSW)	Enter	SCART RGB ADJ (FASTSW) adjustment
	3	SCART R CUTOFF	64	SCART R CUTOFF adjustment value
	4	SCART G CUTOFF	64	SCART G CUTOFF adjustment value
	5	SCART B CUTOFF	64	SCART B CUTOFF adjustment value
	6	SCART R GAIN	44	SCART R GAIN adjustment value
	7	SCART G GAIN	44	SCART G GAIN adjustment value
	8	SCART B GAIN	44	SCART B GAIN adjustment value
10/21				
	1	VCOM ADJ	0	Common bias adjustment
11/21				
	1	R GAIN (LO)	0	R DRIVE adjustment value
	2	G GAIN (LO)	0	G DRIVE adjustment value
	3	B GAIN (LO)	0	B DRIVE adjustment value
	4	R GAIN (HI)	0	R DRIVE adjustment value
	5	G GAIN (HI)	0	G DRIVE adjustment value
	6	B GAIN (HI)	0	B DRIVE adjustment value
12/21				
	1	MONITOR TIME OUT	ON	Monitor and the main communication time-out setting
	2	MONITOR MAX TEMP	45	MONITOR MAX temperature setting
	3	MONITOR EEP READ/WRITE	WRITE	MONITOR EEPROM READ/WRITE Setting/execution
	4	MONITOR EEP ADR	0x 0	MONITOR EEPROM arbitrary addressing
	5	MONITOR EEP DATA	0x 0	MONITOR EEPROM arbitrary data specification

Page	Line	Item	Description	Remarks (adjustment detail, etc.)
13/21				
	1	LCD TEST PATTERN	OFF	Pattern with built-in LCD controler display
	2	LCD TEST PATTERN 1	OFF	
	3	LCD TEST PATTERN 2	OFF	
	4	LCD TEST PATTERN 3	OFF	
	5	LCD TEST PATTERN 4	OFF	
14/21				
	1	FRV-N Firmware Version	xxxxx	
	2	FRC-N Boot Script Version	xxxxx	
	3	FRC-N Device Version	xxxxx	
	4	TCON FPGA1 Serial Flash Version	xxxxx	
	5	TCON FPGA2 Serial Flash Version	xxxxx	
	6	TCON FPGA1 Config Rom Version	xxxxx	
	7	TCON FPGA2 Config Rom Version	xxxxx	
15/21				
	1	POWER LED BRIGHTNESS	0	
	2	MENU LED BRIGHTNESS	0	
	3	INPUT LED BRIGHTNESS	0	
	4	CH UP LED BRIGHTNESS	0	
	5	CH DOWN LED BRIGHTNESS	0	
	6	VOL UP LED BRIGHTNESS	0	
	7	VOL DOWN LED BRIGHTNESS	0	
	8	LOGO LED BRIGHTNESS	99	
	9	ICON LED BRIGHTNESS	99	
	10	ICON LED BRIGHTNESS (STANDBY)	30	
16/21				
	1	POWER KEY SENSITIVITY	0	
	2	MENU KEY SENSITIVITY	0	
	3	INPUT KEY SENSITIVITY	0	
	4	CH UP KEY SENSITIVITY	0	
	5	CH DOWN KEY SENSITIVITY	0	
	6	VOL UP KEY SENSITIVITY	0	
	7	VOL DOWN KEY SENSITIVITY	0	
17/21				
	1	KEY STRENGTH GET MODE	Enter	
	2	POWER KEY STRENGTH		
	3	MENU KEY STRENGTH		
	4	INPUT KEY STRENGTH		
	5	CH UP KEY STRENGTH		
	6	CH DOWN KEY STRENGTH		
	7	VOL UP KEY STRENGTH		
	8	VOL DOWN KEY STRENGTH		
18/21				
	1	READ/WRITE	READ	Read/Write
	2	SLAVE/ADDRESS	SLAVE0	Slave address
	3	REGISTER ADDRESS	0x 0	Register address
			0x 0	
	4	WRITE DATA	0x 0	Writing data
			0x 0	
	5	READ DATA	0x 0	Reading data
			0x 0	
19/21				
	1	RF AGC BG	6	RF-AGC BG adjustment execution
	2	RF AGC DK	5	RF-AGC DKG adjustment execution
	3	RF AGC I	6	RF-AGC I adjustment execution
	4	RF AGC L/L'	4	RF-AGC L/L' adjustment execution
20/21				
	1	ERROR STANDBY CAUSE 1	NO RECORD	ERROR STANDBY CAUSE
	2	ERROR STANDBY CAUSE 2	NO RECORD	
	3	ERROR STANDBY CAUSE 3	NO RECORD	
	4	ERROR STANDBY CAUSE 4	NO RECORD	
	5	ERROR STANDBY CAUSE 5	NO RECORD	
	6	STANDBY CAUSE RESET	OFF	Reset stand by cause.

Page	Line	Item	Description	Remarks (adjustment detail, etc.)
21/21				
	1	EEP SAVE	OFF	Writing setting values to EEPROM.
	2	EEP RECOVER	OFF	Reading setting values from EEPROM.
	3	MONITOR ERROR CAUSE RESET	OFF	Reset of monitor error cause
	4	MODEL NAME	LE824	MODEL NAME
	5	PANEL SIZE	40	Panel size setting
	6	PANEL LIMIT	ON	PANEL LIMIT
	7	PANEL RANGE LIMIT	xxx	PANEL RANGE LIMIT
	8	SHORT CHECK MODE	Enter	Check LED Back light
	9	SHORT CHECK CURRENT	60	
	10	CURRENT SW	LOW	
	11	PRODUCT EEP ADR	0x 0	Don't touch when serving (for producer of factory)
	12	PRODUCT EEP DATA	0x 0	Don't touch when serving (for producer of factory)
	13	PRODUCT FACTORY	1	Don't touch when serving (for producer of factory)

8. Special features

1. NORMAL STANDBY CAUSE (Page 1/21)

   Display of a cause (code) of the last standby.

   The cause of the last standby is recorded in EEPROM whenever it is possible.

   Checking this code will be useful in finding a problem when you repair the troubled set.

2. EEP SAVE (Page 21/21)

   Storage of EEP adjustment value

3. EEP RECOVER (Page 21/21)

   Retrieval of EEP adjustment value from storage area.

4. MONITOR ERR CAUSE (Page 1/21)

   Display of a cause (code) of Error from sub-Microcomputer.

   The cause of Error is recorded in EEPROM whenever it is possible.

   Checking this code will be useful in finding a problem when you repair the troubled set.

   1) This displays Error code and time when the error occurred.

      The latest error is displayed on “1)”

      The error that happens ahead of “1)” is displayed on “2)”.

   2) The character depends on the way how to acquire Time Information

      T: Time is acquired from digital broadcasting
      This doesn't contain “Time offset” which is considered a time difference and Daylight-Saving Time, etc. ...

      U: Time is acquired from analog broadcasting (teletext)

      B: Accumulation time of Backlight
      In the case that Time information cannot be acquired, “B” is displayed.

   Example) In this example, it is shown that the error occurred 3 times.

   1) 16 T07/01/01 12:03 Error code: 16 (lamp error) Time: 07/01/01 12:03
      * It is latest Error.
      * Time is acquired from digital broadcasting.
      * Time is UTC which doesn't have Time offset.

   2) 16 U01/01/01 04:07 Error code: 16 (lamp error) Time: 07/01/01 04:07
      * It is Error that happens ahead of “1)”.
      * Time is acquired from analogue broadcasting.

   3) 16 B00000004:11 Error code: 16 (lamp error) Accumulation time: It is displayed that 4:11 have passed after Backlight driving.
      * It is Error that happens ahead of “2)”.

   4) 00 0000000000000 No error (“00” shows that the error is not occurred.)

9. Lamp Error detection

1. Function

   This LCD colour TV set incorporates a Lamp error detection feature that automatically turns off the power for safety under abnormal lamp or lamp circuit conditions. If by any chance anything is wrong with the lamp or lamp circuit or if the lamp error detection feature is activated for some reason, the following will result.

   1) The power is interrupted in about 500ms after it is turned on.

      (A central icon on the front of the TV flash on and off.: ON for 400ms and OFF for 1600ms.).

   2) If the above phenomenon 1) occurs 5 times, it becomes impossible to turn on the power.

      (A central icon keep flashing on/off.)

2. Measures

   1) Set the lamp error detection to OFF

      Enter the adjustment process mode, referring to “4. Entering and exiting the adjustment process mode.”

      The adjustment process mode can ignore “5 times count”, so If the above phenomenon 1) occurs 1~4 times, the lamp will go out.

      If Lamp Error detection pin (6pin of LB: P9602) is “High” by a trouble with the lamp and lamp circuit, it can boot-up by the adjustment process mode.

      Please execute **“Lamp Error detection off-mode”.**

      While holding down the “VOL (-)” and “CH (∧)” keys on the set at once, touch the power supply key on the set.

      After a central icon flash on, separate the fingers from key on the set.

      Then, you can check the operation to see if the lamp and lamp circuit are in trouble.

      If you fail boot-up, retry the procedure.

   2) Resetting the lamp error count

      After the lamp and lamp circuit are improved from a trouble, reset the lamp error count.

      (Because the power cannot be turned on, if a lamp error is detected 5 consecutive times)

      a) Enter the adjustment process mode, referring to “4. Entering and exiting the adjustment process mode.”

      b) Using the cursor (▲/▼) key, move to the cursor to [LAMP ERROR RESET], Line 8 on adjustment process mode service page 2/21.

      c) With the cursor (◄/►) keys, select the [LAMP ERROR RESET] value.

         Finally press the cursor (OK)., the count is reset.

         Check LAMP ERROR Count on adjustment process mode Page 2/21.

Table of contents of adjustment process mode Page 2/21

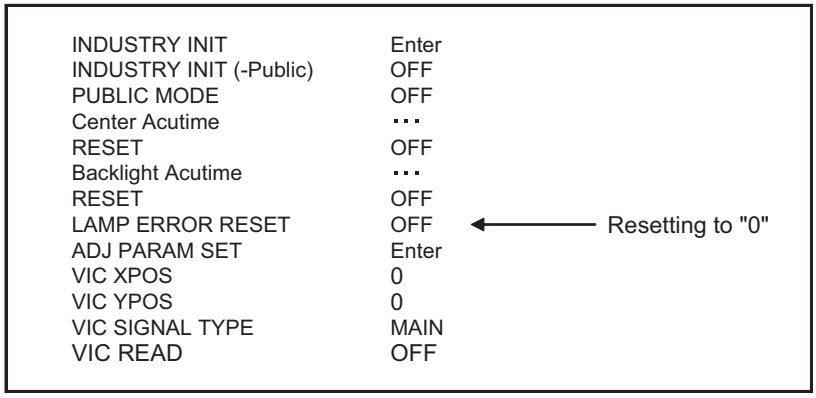

10. Public Mode

1. Starting the Public Mode
   - There are two following ways to display the PUBLIC Mode setting screen.

   1) Method of needing password
      a) Turn off the power, refer to “3. Method of shuts down for Power supply”
      b) While holding down the “INPUT” and “Volume (+)” keys on the set at once, touch the power supply key on the set.
         Please separate the finger from the power supply key when boot-up is confirmed with lighting of a central icon etc.
         After a while, value of Public Mode appears on the screen.
      c) Display the Pass Word input screen.

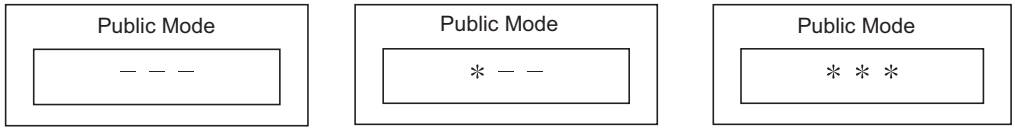

      Operation procedure
      - The initial input position is the digit at the left end.
      - For the numeric keys “0” to “9” of R/C, key input is accepted.
        Input of the other keys is prohibited.
      - Change “—” to “ * ” by inputting the numeric key at the input position, and shift the input position rightward one digit.
      - When three digits are completely input, the Pass Word is judged.

      d) Check the Pass Word by inputting three digits.
         If the Pass Word “0” “2” “7”, it shifts to the PUBLIC Mode setting screen.
         In another case, the screen is erased, and it operates in the ordinary mode.

2. Exiting the Public Mode Setting screen
   - There are two following ways to exit the Public Mode setting screen.

   1) Turn off the power.
   2) Select “Execution” in the PUBLIC_Mode to execute it.
      Activate the restart under the set content.
      Here, the START input SOURCE setting is excluded since this item is referred to only when the power is turned on.

3. Set value of the Public Mode
   - When the shipment setting is done, a set each value in Public Mode is initialized.
     (PUBLIC MODE in the process mode Setting of a flag is also initialized)
   - Separately, the shipment beginnings when all except for each set value in Public Mode is initialized are provided for a process mode.
     (INDUSTRY INIT (-Public))
   - Only when turning on the PUBLIC MODE item, each setting is effective.
   - After it decides it with EXECUTE, it AC OFF/ON it to reflect a set value.

4. Basic operation in the Public Mode

Vol (+/-) or Cursor (◄/►)	Change or execution of the set value.
CH (／＼) or Cursor (▲/▼)	Movement to the selected item.
Decision (ok)	Execution (Used by the items “Execution” and “RESET”.)

Public Mode setting screen.

Public Mode	
POWER ON FIXED	[VARIABLE]
SHUT DOWN MODE	[NORMAL]
MAXIMUM VOLUME	[60]
VOLUME FIXED	[VARIABLE]
VOLUME FIXED LEVEL	[20]
RC BUTTON	[RESPOND]
PANEL BUTTON	[RESPOND]
MENU BUTTON	[RESPOND]
AV POSITION FIXED	[VARIABLE]
ON SCREEN DISPLAY	[YES]
INPUT MODE START	[NORMAL]
INPUT MODE FIXED	[VARIABLE]
LOUD SPEAKER	[ON]
RC PATH THROUGH	[OFF]
232C POWON	[DISABLE]
PUBLIC MODE	[ON]
RESET	
EXECUTE	

5. Operation after “RESET”

Select “RESET” in the PUBLIC Mode, and it operates as follows when it is executed (refer to the basic operation).

- The set contents in the PUBLIC mode are initialized.
- It does not exit the PUBLIC mode.
- If “EXCUTE” is not executed, the content that does RESET is not reflected.

6. Setting items (* Item names and selective items are expressed in English.)

1) Power ON fixed [POWER ON FIXED]

Option	“VARIABLE”, “FIXED_ALL”, “FIXED_BODYKEY” or “RCRESPOND” (loop enabled)
Default	“VARIABLE”
Function	• VARIABLE : “POWER/RECEPTION” key on TV unit or remote control is enabled. • FIXED_ALL“ : “POWER/RECEPTION” key on TV unit or remote control is disabled. • FIXED_BODYKEY : only the “MAIN POWER” key on TV unit is disabled (the remote control is enabled). • RC RESPOND : the main unit’s POWER switch toggles between ON and Standby (the same operation by the remote control).
Key disabled when set other than default	• OFF TIMER (SLEEP) (* Only when setting to FIXED_ALL)
Remarks	• When selecting to “FIXED_ALL”, function related standby factors (see below) doesn't work. and not selecting OFF TIMER (Sleep) No operation OFF No signal OFF (including the power management) * These items does not exist according to the model.

If the power button is pressed in the ordinary mode in setting to “FIXED_ALL” and “FIXED_BODYKEY”, the caution is displayed for 5 seconds.

When power button on the main unit is pressed

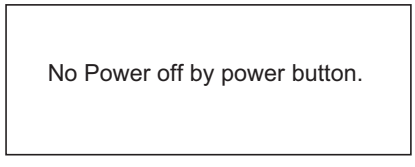

When power button on R/C is pressed

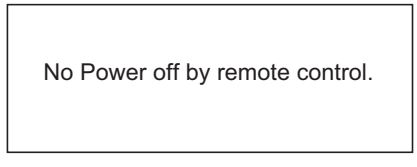

* The OSD display is an example.

If another ODS is previously displayed, the status is reset (MENU or similar).

2) Instantaneous current shutdown setting in turning off the power [SHUT DOWN MODE]

Option	“NORMAL” or “QUICK”
Default	NORMAL
Function	• This function decides whether scanning digital tuner is enabled or disabled when the power is standby.
	NORMAL : Scanning digital tuner is enabled when the power is standby. QUICK : Scanning digital tuner is disable It is possible to put into the standby state instantaneously due to power off input, when the power is standby. Immediately, state is a complete standby.
Remarks	In selecting “QUICK”, the function does not work for the following items (selection impossible.) • ON TIMER, QUICK START, DIGITAL FIXED, etc. * These items does not exist according to the model.

3) Volume maximum level [MAXIMUM VOLUME]

Option	0~60 (loop disabled)
Default	60
Function	The volume cannot be increased more than the adjusted value (the main unit’s speaker only).
Remarks	• When setting to 59 or less, only the figure is displayed in the normal mode; the volume bar is not displayed. • The volume of the headphones is limited. or monitor output • The setting is impossible when VOLUME FIXED is set to FIXED.

4) Volume fixed [VOLUME FIXED]

Option	“VARIABLE”, “FIXED”, “ACCTRL” or “AC/RCCTRL” (loop enabled)
Default	“VARIABLE”
Function	• VARIABLE : The volume is not fixed. • FIXED : The volume is fixed to the value adjusted in the volume fixed level. • AC CTRL : The unit starts at the volume specified in the volume fixed level, when power is turned on in the case of the AC-ON only. • AC/RC CTRL : The unit starts at the volume specified in the volume fixed level, when power is turned on in any case. (AC→ON, remote control→ON, main unit's key→ON)
Exception	• In the adjustment process, the volume can be set to any level regardless of this setting.
Disabled key when setting to FIXED	• VOLUME UP/DOWN [both remote control and main unit] • MUTE
Remarks	• [MAXIMUM VOLUME] has priority to [VOLUME FIXED] * When setting to FIXED, Maximum volume is fixed. • The volume of the headphones is fixed. • When setting to “FIXED”, the volume is not displayed in operating Disabled key • In menu operation, the main unit's keys (Vol (+/-)) are enabled.

5) Volume fixed level [VOLUME FIXED LEVEL]

Option	0~60 (loop disabled)
Default	20
Function	The volume is fixed to the adjusted value (the main unit’s speaker only).
Exception	• In the adjustment process, the volume can be set to any level regardless of this setting.
Remarks	• When [VOLUME FIXED] is set to “VARIABLE”, the setting cannot be changed.

6) Remote control operation [RC BUTTON]

Option	“RESPOND”, “NORESPOND” or “LIMITED” (loop enabled)
Default	“RESPOND”
Function	The operation of the remote control’s keys is set. RESPOND : the remote control’s keys in the normal state are enabled. NO RESPOND : the remote control’s keys in the normal state are disabled. The POWER key (RECEPTION/STANDBY key) is also disabled. LIMITED : only a part of keys (CHANNEL, etc.) is enabled and other keys are disabled.
Exception	• In the adjustment process mode, inspection mode are enabled regardless of this setting. • All the keys are enabled regardless of this setting while entering the adjustment process mode, inspection mode or Public Mode setting screen.
Remarks	The enable keys when setting to “LIMITED” are depended on keys of controler for Public. It is different according to Model.

7) Main Unit Operation [PANEL BUTTON]

Option	“RESPOND” or “NORESPOND” (loop enabled)
Default	“RESPOND”
Function	• RESPOND : The main unit’s keys are enabled. • NO RESPOND : The main unit’s keys are disabled excluding the POWER key (RECEPTION/STANDBY key).
Exception	• The start operation in the adjustment process mode, inspection mode are enabled regardless of this setting. • All the keys are enabled regardless of this setting while entering the adjustment process mode, inspection mode or Public Mode setting screen. • For the models with the MENU key on the main unit, menu operation is possible regardless of the setting during the initial setting when the power is turned on for the first time.

8) Menu operation [MENU BUTTON]

Option	“RESPOND” or “NO RESPOND” (loop enabled)
Default	“RESPOND”
Function	The MENU key on the main unit and remote control is decided whether it is enabled or disabled.
Exception	• RESPOND : The menu key is enabled. • NO RESPOND : The menu key is disabled. : The start operation in the adjustment process mode, inspection mode is enabled regardless of this setting. : All the keys are enabled regardless of this setting while entering the process mode, inspection mode or Public Mode setting screen.
Disabled key excluding Menu key when setting to not default	All the direct transition keys to menu display (AUTO PRESET, MANUAL MEMORY and others) * These keys does not exist according to the model.
Remarks	When setting to “NO RESPOND” • For the models with the MENU key on the main unit, menu operation is possible regardless of the setting while the initial setting when the power is turned on for the first time

9) AV position fixed [AV POSITION FIXED]

Option	“VARIABLE” or “FIXED” (loop enabled)
Default	“VARIABLE”
Function	• VARIABLE : AV position is not fixed. • FIXED : AV position is fixed. : The image/sound adjustment items in the menu are fixed in the selected state. : When receiving “AV POSITION” of the remote control, only the actual state is displayed, and setting is not changed.
Remarks	• When receiving the sound select direct keys (AV POSITION key, OPC, DOLBY key, etc.), only the actual state is displayed; no setting is changed. * These keys does not exist according to the model. • The settings for the Public mode are retained after the personal data is initialized, each item for the AV position and image/sound adjustment are not initialized.

10)OSD display [ON SCREEN DISPLAY]

Option	“YES”, “NO” or “LIMITED” (loop enabled) “LIMITED” is looped only in case of need (destination).
Default	“YES”
Function	• YES : OSD is displayed • NO : the following OSD is not displayed. Registration, setting, adjustment menu, channel call, volume bar, and input select • LIMITED : only a part of OSD (CH call: “New Information” etc. ...) is not displayed.
Key which may be enabled (Example of the confusing key)	• It is OK in the case that simple input select occure or the original state returns soon automatically.
Disabled key when setting to not default	• When setting to “NO”, the keys which is related to visibility of the screen and sound cannot be used. STILL IMAGE, SCREEN DISPLAY, OFF TIMER, AV POSITION, BRIGHTNESS SENSOR, SCREEN SIZE SELECT, AUTO PRESET, MANUAL MEMORY, IMAGE SELECT, SOUND SELECT, LANGUAGE, Closed caution * Disabled keys dependeds on the models.
Remarks	• When setting to “NO”, ON TIMER (Watching reservation) is cleared. OFF TIMER “SLEEP” is cleared. * These items does not exist according to the model. • When setting to “NO”, These Displays (Version-up, Public mode setting screen, Pass Word input screen of Public Mode, the adjustment process mode, K mark of inspection mode) are enabled regardless of this setting.

11)Start mode [INPUT MODE START]

Option	“NORMAL” or “Input source 1 (input selection or channel)” . . . (loop enabled)
Default	“NORMAL”
Function	which kinds of input source or channel is decided when the power turning on. NORMAL : the content of the last memory is followed.
Remarks	• When setting to not Normal, ON TIMER (Watching reservation) has priority. • When setting to “NORMAL”, [INPUT MODE FIXED] is set to “VARIABLE”. and [INPUT MODE FIXED] is prohibited to select. (selection impossible.)

Example of option: “NORMAL”

“TVD (002TV)”, “INPUT1”, “INPUT2”, “INPUT3”, “HDMI1”, “HDMI2”, “HDMI3”, “HDMI4”.

12)Input fixed [INPUT MODE FIXED]

Option	“VARIABLE” “FIXED”, “ACCTRL” or “AC/RCCTRL” (loop enabled)
Default	VARIABLE
Function	VARIABLE : If [INPUT MODE START] is set to Normal, input mode is not fixed. FIXED : when “INPUT MODESTART” is active, it is impossible to switch to another channel or input source. AC CTRL : when “INPUT MODESTART” is active the unit starts at the input mode which is selected when power is turned on in the case of the AC-ON only. AC/RC CTRL : when “INPUT MODESTART” is active the unit starts at the input mode which is selected when power is turned on in any case (AC→ON, remote control→ON, main unit's key→ON)
Disabled key when setting to “FIXED”	CHANNEL (+/-), DIRECT CHANNEL buttons, FLASHBACK, INPUT SELECT, TV/VIDEO, AUTO PRESET, MANUAL MEMORY, i.LINK, DIRECTINPUTSELECT, ATV, DTV, EPG, RADIO etc. ...
Remarks	• If [INPUT MODE START] is Normal, this function cannot be set. Set to “VARIABLE” automatically. • When setting to “FIXED”, The item related to the channel setting and input selection in Menu are not displayed. ON TIMER (Watching reservation) is not active. * These items does not exist according to the model.

13)Speaker ON/OFF selection [LOUD SPEAKER]

Option	“ON” or “OFF” (loop enabled)
Default	ON
Function	ON : The sound from the speakers is output. OFF : The sound from the speakers is not output even if the headphones are not used.
Remarks	• When the VOL (+/-) key is pressed, the mute icon is displayed for 4 seconds. • For the MUTE key and sound-related keys, caution is displayed. • For the headphones, normal operation is possible.

14)Remote control path through [RC PATH THROUGH]

Option	“OFF”, “ON: TVRCE” or “ON: TVRCD” (loop enabled)
Default	OFF
Function	The item decide whether the signal received by the remotecontrol’ slight-receiving section is output to the blankpin (9pin) of RS232C. OFF : this function is not active. ON: TVRCE : this function is active, and remote control is active, too ON: TVRCD : this function is active, but remote control is not active
Exception	• In the case of “ON:TV RCD”, the start operation in the adjustment process mode, inspection mod are enabled regardless of this setting. • In the case of “ON: TV RCD”, all the keys are enabled regardless of this setting while entering the adjustment process mode, inspection mode or Public mode setting screen.
Remarks	* Remote control path through does not exist according to the model.

15)232C power ON control [232C POWON]

Option	“ENABLE” or “DISABLE” (loop enabled)
Default	DISABLE
Function	The item decide whether Power ON by the 232C command is enabled/disabled in the standby state. The same function as 232C command “RSPW”. ENABLE : POWR0001 is always enabled. DISABLE : Start-up may be impossible at POWR0001. (If the 232C command reception module is set to OFF, the command is invalid.)

16)Public mode setting [PUBLIC MODE]

Option	“OFF” or “ON” (loop enabled)
Default	OFF
Function	The item decide whether Public mode setting menu are enabled or disabled. The same item as [PUBLIC MODE] in the adjustment process menu. OFF : Public mode is not active ON : Public mode is active
Remarks	Each operation of the Public mode is impossible unless this item is set to ON.

11. Video signal adjustment procedure

The adjustment process mode menu is listed in Section 5.

Signal generator level adjustment check (Adjustment to the specified level)

- Composite signal PAL/SECAM : 0.7Vp-p ± 0.02Vp-p (Pedestal to white level)
- RGB signal : 0.7Vp-p ± 0.02Vp-p
- 15K component signal (50 Hz) : Y level : 0.7Vp-p ± 0.02Vp-p (Pedestal to white level)
  : PB, PR level : 0.7Vp-p ± 0.02Vp-p
- 33K component signal (50 Hz) : Y level : 0.7Vp-p ± 0.02Vp-p (Pedestal to white level)
  : PB, PR level : 0.7Vp-p ± 0.02Vp-p
- ANALOG RGB signal : RGB level : 0.7Vp-p ± 0.02Vp-p

11.1. Entering the adjustment process mode

Enter the adjustment process mode according to Section 4.

11.2. PAL signal adjustment

	Adjustment point	Adjustment conditions	Adjustment procedure
1	Setting	[Signal] PAL Full field colour bar composite signal [Terminal] EXT1 SCART IN	• Feed the PAL full field colour bar signal (75% colour saturation) to EXT1 SCART IN. [VIDEO input signal] 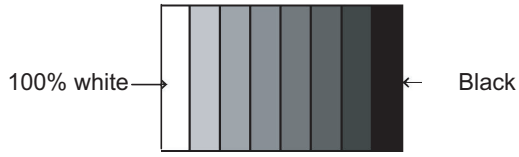
2	Auto adjustment performance	Adjustment process [PAL ADJ] page 4/21	Bring the cursor on [PAL ADJ] and press [OK]. [PAL ADJ OK] appears when finished.

* **ATTENTION:** Please execute [3. TUNER adjustment] afterwards if you adjust [2. PAL signal adjustment] after all adjustments are completed.

11.3. TUNER adjustment

	Adjustment point	Adjustment conditions	Adjustment procedure
1	Setting	[Signal] PAL split field colour Bar RF signal UV [Terminal] TUNER	• Feed the PAL Split Field colour bar signal (E-12ch) to TUNER. • Make sure the PAL colour bar pattern has the sync level of 7:3 with the picture level. Signal level: 55 dB μV ± 1dB (75Ω LOAD) [E-12CH] 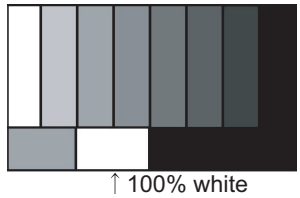
2	Auto adjustment performance	Adjustment process [TUNER ADJ] page 3/21	Bring the cursor on [TUNER ADJ] and press [OK]. [TUNER ADJ OK] appears when finished.

11.4. SECAM adjustment

	Adjustment point	Adjustment conditions	Adjustment procedure
1	Setting	[Signal] SECAM Full field colour Bar Signal [Terminal] EXT1 SCART IN	• Feed the SECAM full field colour bar signal (75% colour saturation) to EXT1 SCART IN. [VIDEO input signal] 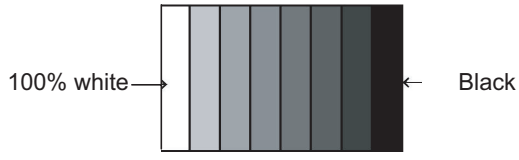
2	Auto adjustment performance	Adjustment process [SECAM ADJ] page 4/21	Bring the cursor on [SECAM ADJ] and press [OK]. [SECAM ADJ OK] appears when finished.

11.5. ADC adjustment (Component 15K)

	Adjustment point	Adjustment conditions	Adjustment procedure
1	Setting	[Signal] COMP15K, 50Hz 100% Full field colour bar Signal [Terminal] EXT3 COMPONENT IN	• Feed the COMPONENT 15K 100% full field colour bar signal (100% colour saturation) to EXT3 COMPONENT IN. 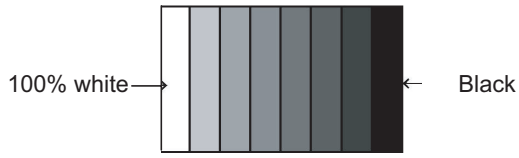
2	Auto adjustment performance	Adjustment process [COMP15k ALL ADJ] page 6/21	Bring the cursor on [COMP15k ALL ADJ] and press [OK] [COMP15k ALL ADJ] [OK] appears when finished.

11.6. ADC adjustment (Component 33K)

	Adjustment point	Adjustment conditions	Adjustment procedure
1	Setting	[Signal] COMP33K, 50Hz 100% Full field colour bar Signal [Terminal] EXT3 COMPONENT IN	• Feed the COMPONENT 33K 100% full field colour bar signal (100% colour saturation) to EXT3 COMPONENT IN. 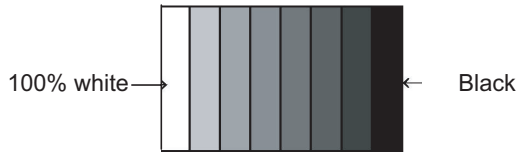
2	Auto adjustment performance	Adjustment process [HDTV ADJ] page 7/21	Bring the cursor on [HDTV ADJ] and press [OK]. [HDTV ADJ OK] appears when finished.

11.7. PC signal adjustment (ANALOG RGB)

	Adjustment point	Adjustment conditions	Adjustment procedure
1	Setting	[Signal] XGA, 60Hz 100% Full Field Colour Bar Signal [Terminal] EXT3 PC IN	• Feed the XGA 60Hz 100% full field colour bar signal (100% colour saturation) to EXT3 PC IN. 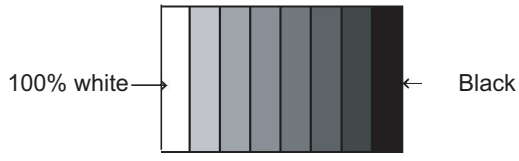
2	Auto adjustment performance	Adjustment process [ANALOG PC ADJ] menu page 8/21	Bring the cursor on [ANALOG PC ADJ] and press [OK]. [ANALOG PC ADJ OK] appears when finished.

11.8. RGB (SCART) adjustment (RGB 15K)

	Adjustment point	Adjustment conditions	Adjustment procedure
1	Setting	[Signal] RGB 15K, 50Hz 100% Full field colour bar signal [Terminal] EXT1 SCART RGB IN	• Feed the RGB 15k 50Hz 100% full field colour bar signal (100% colour saturation) to EXT1 SCART IN. 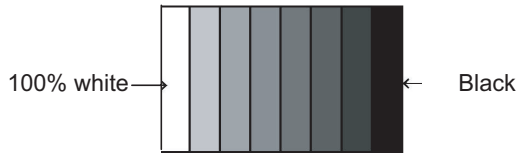
2	Auto adjustment performance	Adjustment process [SCART RGB ADJ] menu page 9/21	Bring the cursor on [SCART RGB ADJ] and press [OK]. [SCART RGB ADJ OK] appears when finished.

12. White Balance Adjustment

For white balance adjustment, adjust the offset values on pages 11/21.

[Condition of the unit for inspection] : Modulated light (+16), Colour temperature (High)
AV MODE: DYNAMIC
Active Backlight: OFF
OPC: OFF
Asing Time: Min,60 minute
[Input signal condition] : HDMI 1080i 15IRE (LO), 78IRE (HI)
[Adjustment reference device] : Minolta CA-210

[Adjustment procedure]

1) Display the current adjustment status at R/G/B_GAIN (HI). (Page 11/21 of process adjustment)

   The signal of 78IRE is input.

2) Read the value of the luminance meter. x = 0.272, y = 0.277

3) Change R_GAIN (HI)/B_GAIN (HI) (Adjustment offset value) on page 11/21 of process adjustment so that the values of the luminance meter approach x = 0.272 and y = 0.277.

   (Basically, G is not changed. If adjustment fails with R and B, change G. When G is lowered, the weaker of R or B must be fixed.)

4) Display the adjustment status of the current R/G/B_GAIN (LO).

   The signal of 15IRE is input.

   Change R_GAIN (LO)/B_GAIN (LO) (adjustment offset value) on page 11/21 of process adjustment so that the values of the luminance meter approach x = 0.272 and y = 0.277.

5) Both HI and LO are repeating the step from 1 to 4 until becoming an aim value.

   [Adjustment reference standard value]

   Adjustment spec ± 0.002 Inspection spec ± 0.004 (point LO)

   Adjustment spec ± 0.001 Inspection spec ± 0.002 (point HI)

6) After completing adjustments, set EEP SAVE (21/21) to ON in the process menu to save the white balance adjustment value.

13. Confirmation item

1. HDMI-CEC Inspection

   After repairing the CEC function, check the operation about HDMI-CEC circuit

2. CI card Inspection

   After repairing the CI function, check that the DTV signal is received in the UK setting by inserting CAM

   And check the KEY certification by inserting CAM which is prepare for CI+

3. LAN Inspection

   After repairing the LAN function, check the communication by connecting PC and LAN terminal.

14. Initialization to factory settings

CAUTION: When the factory settings have been made, all user setting data, including the channel settings, are initialized.
(The adjustments done in the adjustment process mode are not initialized.) Keep this in mind when initializing these settings.

	Adjustment point	Adjustment conditions	Adjustment procedure
1	Factory settings	ends by turning off the MAIN POWER key. (See to below caution)	[Factory setting with adjustment process mode] • Enter the adjustment process mode. • Move the cursor to [INDUSTRY INIT] on page 2/21. • Use the R/C key to select a region from [EUROPE/RUSSIA] and press the [OK] key. • “EXECUTING” display appears. • After a while, “SUCCESS” display appears, the setting is completed. When succeeding: Background colour (green) When failing: Background colour (red)
			The following items are initialized in the factory setting. 1) User settings 2) Channel data (e.g. broadcast frequencies) 3) Maker option setting 4) Password data

After adjustments, exit the adjustment process mode.
To exit the adjustment process mode, unplug the AC power cord from the outlet to forcibly turn off the power.
When the power is turned off with the remote control, unplug the AC power cord and plug it back in (wait approximately 10 seconds before plugging in the AC power cord)
Please execute the initialized in the factory setting again when you turn on the power supply after the initialized in the factory setting is set.

15. Upgrading the software

1. Turn on the AC power.
2. Insert the upgrading USB flash memory for upgrade into the service slot.
   (After a while, an external input changes into USB automatically.)
3. Use the Menu button and cursor keys (◄/►/▲/▼), CH keys (∧ / ∨) of R/C or on the set to select Menu - Setup - Information - Software update on OSD menu.
4. The message (Insert the USB memory device contains the software update file) shows up.
   Push OK when if there is no problem.
5. After a while, if software update file is detected in the USB memory device, the following screen shows up.
   Select OK when if there is no problem.

NOTE: If there is no software update file in the USB memory device, caution shows up.
Please insert the correct file and retry software update.

NOTE: If software update file in the USB memory device doesn't mutch this model, caution shows up.
Please insert the correct file and retry software update.

NOTE: If software update file in the USB memory device is already installed, caution shows up.
Please reconfirm the software version and reinstall (if necessary).

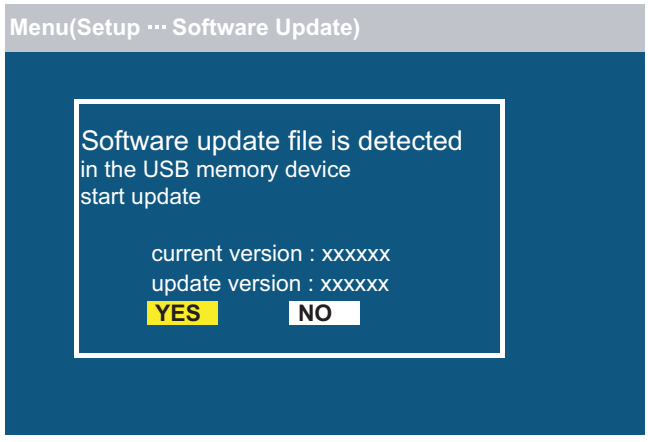

6. The caution for update showes up.
   - The picture will temporary go dark until the software update display apeeares
   - Wait several minutes and don't unplug the AC cord

   Select OK when if there is no problem.
7. Software update starts.

   Please wait for a while until the bar shows 100%

NOTE: Do not take out the USB memory device during updating.

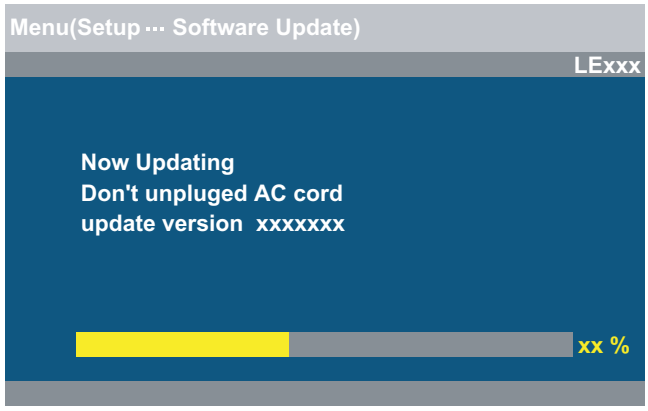

8. When all the procedures are complete, the following upgrade success screen shows up.

   The new software version can be confirmed on screen.

   After a while, Turn off power and boot-up automatically.

NOTE: TV is restarted automatically, the AC code need not be pulled out.

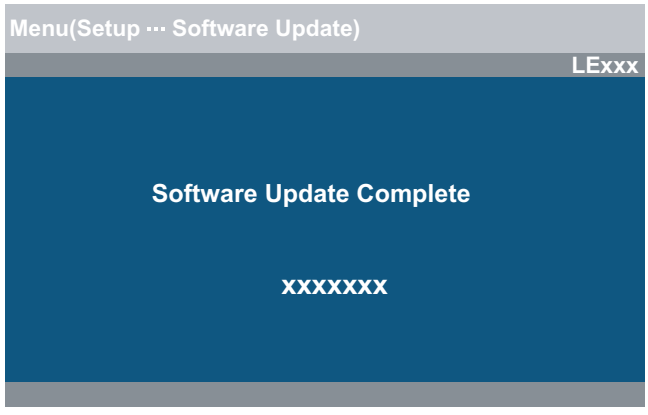

9. After boot-up, the following caution shows up.

   Select OK when if there is no problem.

   Software update is completed, please remove the USB memory device.

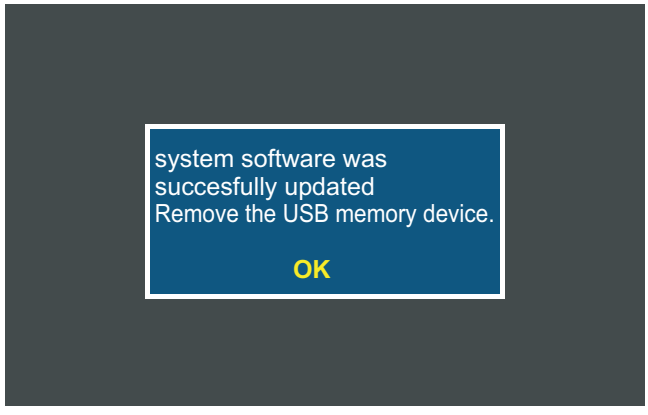

NOTE: Then get the set started and call the process adjustment screen 1/21 to check the main software version.

CHAPTER 5. TROUBLESHOOTING TABLE

[1] TROUBLESHOOTING TABLE

No power (Central Icon LED failure to light up) or No startup (Central Icon LED is flashing)

↓

Is the AC cord connector tightly connected to the set?	NO →	Reconnect the AC cord tightly and turn on the power again.

↓ YES

Are the wire harnesses and other cables properly connected in the set?	NO →	Reconnect the wire harnesses and other cables properly in the set.

↓ YES

Is there the pins (11/BU+5V) of P9601 as specified?	NO →	Replace the power unit.

↓ YES

Is there the pins (10/PS_ON) of P9601 at “H”?	NO →	Check the signal line between PS_ON and IC2002.

↓ YES

Is there the pins (9/AC_DET) of P9601 at “H”?	NO →	Check the power unit, and the signal line between AC_DET and IC2002.

↓ YES

Is there the pins (1, 2, 3, 4/UR+13V) of P9601 at “H”?	NO →	Check the signal line between PS_ON and IC2002.

↓ YES

Are the DC/DC converter outputs and the output voltages along the control lines as specified?	NO →	Check the DC/DC converters and the control lines. Replace defective parts as required.

1) BU3.3V (IC9609 etc.)
2) D3.3V (IC9605 etc.)
3) D5.6V (IC9608 etc.)
4) D5V (IC9612 etc.)
5) D+1.8V (IC9606 etc.)
6) D+1.05V (IC9604 etc.)
7) STB+3.3V (Q9604 etc.)
8) S+8V (IC9610 etc.)
9) CPU+1.2V (IC9603 etc.)

The sound is not emitted from the Speaker & Woofer though the picture has come out.

↓

No sound output in all modes?

↓ YES

Is the signal output from pins (F30/AOLRCK), (F28/AOBCK) (G28/AOSDATA0) of IC3302 (Digital AV decode & Main CPU)? — NO → Check IC3302 and its peripheral circuits.

↓ YES

Is the signal sent to pins (7), (8), (9) of IC2701 (DSP)? — NO → Check the line between IC3302 and IC2701.

↓ YES

Is the signal output from pins (43/AOBCKL), (44/AMP_LRCLK), (45/AMP_DATA_LR), (46/AMP_DATA_SW), (47/AMP_MCLK) of IC2701? — NO → Check IC2701 and its peripheral circuits.

↓ YES

In the case that the sound is not emitted from the Speaker, refer to (A)
In the case that the sound is not emitted from the Woofer, refer to (B)

↓ (A)

Is the signal sent to pins (5), (6), (7), (8) of IC2703 (SP_AMP)? — NO → Check the line between IC2701 and IC2703.

↓ YES

Is the audio signal output from pins (28/OUTML), (30/OUTPL), (12/OUTPR), (14/OUTMR) of IC2703? — NO → Check IC2703 and its peripheral circuits.

↓ YES

Is pin (21) of IC2703 at “H”? — NO → Check the line between IC2703 and IC3302.

↓ YES

Is the audio signal input to pins (1, 2/L-ch), (3, 4/R-ch) of P2701? — NO → P2701 terminal and the peripheral circuit (L/C filter) are checked.

↓ YES

Check Speaker (right and left) and wire harness.

↓ (B)

Is the signal sent to pins (5), (6), (7), (8) of IC2702 (Woofer_AMP)? — NO → Check the line between IC2701 and IC2702.

↓ YES

Is the audio signal output from pins (28/OUTML), (30/OUTPL), (12/OUTPR), (14/OUTMR) of IC2702? — NO → Check IC2702 and its peripheral circuits.

↓ YES

Is pin (21) of IC2702 at “H”? — NO → Check the line between IC2702 and IC3302.

↓ YES

Is the audio signal input to pins (1/SUB(+)), (2/SUB(-)) of P2702? — NO → P2702 terminal and the peripheral circuit (L/C filter) are checked.

↓ YES

Check Woofer and wire harness.

No sound (during the reception of TV (ANALOG) broadcasting)

↓

Does not the sound go out though the picture has come out when UHF/VHF is received?

↓

Is a SIF signal output from pin (13) of TUNER (TU1101)?

NO → Check the tuner and its peripheral circuits. Replace as required.

↓ YES

Is a SIF signal input to (AB27/S_IF) of IC3302 (Digital AV decode & Main CPU) from pin (13) of TU1101?

NO → Check the line between TU1101 and IC3302. (Q1104, etc.)

↓ YES

Refer to “No sound output in all modes.”

No sound (during the reception of TV (DIGITAL) broadcasting)

↓

Does not the sound go out though the picture has come out when DTV is received?

↓

Is IF signal output to pins (10, 11) of TU1101?

NO → Check the tuner and its peripheral circuits. Replace as required.

↓ YES

Is IF signal sent to pins (14, 15) of IC1102 (Multiplexer)?

NO → Check the line between TU1101 and IC1102.

↓ YES

Are pins (9, 10, 11) of IC1102 at H/L?

↓ L

Is IF signal sent to pins (AA29/D__IF_P, AB29/D__IF_N) of IC3302 (Digital AV decode & Main CPU)?

↓ YES

Refer to “No sound output in all modes.”

↓ H

Is IF signal sent to pins (41/INM, 42/INP) of IC1106?

NO → Check the line between IC1102 and IC1106.

↓ YES

Is signal output to pins (17/CTS_CK_60MHz, 18/CTS_SY, 19/CTS_VA, 21/CTS_D0) of IC1106?

NO → Check IC1106 and its peripheral circuits.

↓ YES

Is signal sent to pins (2,3/CS_TS_CK, 5,6/CS_TS_SY, 10,11/CS_TS_VA, 14/CS_TS_D7) of IC4409 (TS SW)?

NO → Check the line between IC1106 and IC4409.

↓ YES

Is pins (2) of IC4409 at “H”?

NO → Check the line between IC4409 and 21pins of IC4405.

↓ YES

Is signal sent to pins (11/TS_DATA1, 12/TS_DATA2, 13/TS_DATA3, 14/TS_DATA4) of IC4405 (CI Controler)?

NO → Check the line between IC1106 and IC4405.

↓ YES

Is signal output to pins (122/TS_VALIDO, 123/TS_CLKO, 124/TS_DATAO, 124/TS_SYNCO) of IC4405?

NO → Check IC4405 and its peripheral circuits.

↓ YES

Is signal sent to pins (A30/TS_CPUIN_VAL, B30/TS_CPUIN_CLK, C30/TS_CPUIN_SYNC, C29/TS_CPUIN_D0) of IC3302 (Digital AV decode & Main CPU)?

NO → Check the line between IC4405 and IC3302.

↓ YES

Refer to “No sound output in all modes.”

No sound (during the reception of TV (DIGITAL-Satellite) broadcasting)

↓

Does not the sound go out though the picture has come out when DTV is received?

↓

Is signal input to TU1301?

NO → Check the setting of an external input device that connects with TU1301.

↓ YES

Is signal sent to pins (2,3/CS_TS_CK, 5,6/CS_TS_SY, 10,11/CS_TS_VA, 14/CS_TS_D7) of IC4409 (TS SW)?

NO → Check the line between TU1301 and IC4409.
Check TU1301 and its peripheral circuits. (IC1301 etc.)
Replace as required.

↓ YES

Is pins (2) of IC4409 at “L”?

NO → Check the line between IC4409 and 21pins of IC4405.

↓ YES

Is signal sent to pins (4/CS_TS_SCK, 7/CS_TS_SSY, 9/CS_TS_SVA, 12/CS_TS_SDATA) of IC4409?

NO → Check IC4409 and its peripheral circuits.

↓ YES

Is signal sent to pins (11/T0_DATA1, 12/T0_DATA2, 13/T0_DATA3, 14/T0_DATA4) of IC4405 (CI Controler)?

NO → Check the line between IC4409 and IC4405.

↓ YES

Is signal output to pins (122/TS_VALIDO, 123/TS_CLKO, 124/TS_DATAO, 124/TS_SYNCO) of IC4405?

NO → Check IC4405 and its peripheral circuits.

↓ YES

Is signal sent to pins (A30/TS_CPUIN_VAL, B30/TS_CPUIN_CLK, C30/TS_CPUIN_SYNC, C29/TS_CPUIN_D0) of IC3302 (Digital AV decode & Main CPU)?

NO → Check the line between IC4405 and IC3302.

↓ YES

Refer to “No sound output in all modes.”

No sound from external input devices (1)

↓

Does not the sound of the audio signal input to EXT1 go out?

↓

Is there a audio input signal to pins (19/AUDIO_IN_L) and (21/AUDIO_IN_R) of EXT1 (SC505)? — NO → Check the setting of an external input device that connects with EXT1.

↓ YES

Is there a audio input signal to pins (V28/SC1_L) and (V27/SC1_R) of IC3302 (Digital AV decode & Main CPU) from SC505? — NO → Check the line between SC505 and IC3302.

↓ YES

Refer to “No sound output in all modes.”

No sound from external input devices (2)

↓

Does not the sound of the audio signal input to EXT2 go out?

↓

Is there a audio input signal to pins (4/CVBS_IN_L) and (1/CVBS_IN_R) of EXT2 (J505)? — NO → Check the setting of an external input device that connects with EXT2.

↓ YES

Is there a audio input signal to pins (R28/CVBS_L) and (T28/CVBS_R) of IC3302 (Digital AV decode & Main CPU) from J505? — NO → Check IC3302 and its peripheral circuits.

↓ YES

Refer to “No sound output in all modes.”

No sound from external input devices (3)

↓

Does not the sound of the audio signal input to HDMI-2 mode go out?

↓

Check whether it is selected “HDMI + Analog” by the Audio setup under Menu-Setup-Option-Input terminal setting - PC input.

↓ YES

Does not the sound of the audio signal input to PC/Component mode go out?

↓

Check whether it is selected “Video + Audio” by the Audio setup under Menu-Setup-Option-Input terminal setting - PC input.

↓ YES

Is there a audio input signal to pins (2/PC/HDMI_L) and (3/PC/HDMI_R) of J501 (PC AUDIO_IN)?

↓ NO

Check the setting of an external input device that connects with J501.

↓ YES

Is there a audio input signal to pins (V30/PC/HDMI_L) and (V29/PC/HDMI_R) of IC3302 (Digital AV decode & Main CPU) from J501? — NO → Check the line between J501 and IC3302.

↓ YES

Refer to “No sound output in all modes.”

No sound from external input devices (4)

↓

Does not the sound of the audio signal input to HDMI1/2/3/4 go out?

↓

Please Refer to “[External input HDMI-1/2/3/4] No picture on the display (10).”

No sound from external output device (1)

↓

No audio signal output to EXT1 terminal.

↓

Is there a audio input signal to pins (10/AUDIO_OUT_L) and (12/AUDIO_OUT_R) of EXT1 (SC505)? — YES → Check the setting of an external input device that connects with EXT1.

↓ NO

Is SC1-MUTE [118pins of IC4405] or MUTE_A_ALL [21pin of IC2002 (UCOM)] at “H”? — YES → Check the peripheral circuits of IC4405/2002 and SC1-MUTE. (Q502, D529 etc.)

↓ NO

Is there a audio output signal to pins (M30/TUNER_OUT_L) and (M29/TUNER_OUT_R) of IC3302? — YES → Check the line between IC3302 and SC505.

↓ NO

Check IC3302 and its peripheral circuits.

No sound from external output device (2)

↓

No sound from HEAD PHONE_OUTPUT/ AUDIO_OUTPUT terminal.

↓

Does not the sound of the audio signal output to Headphone mode go out?

↓

Check whether it is selected “Headphone” by Headphone/Audio out select under Menu-Setup-Option- Input terminal setting.

↓ YES

Is there a audio output signal to pins (2/HP/MONI_L) and (3/HP/MONI_R) of J504 (HEAD PHONE_OUTPUT/ AUDIO_OUTPUT terminal)?

↓ NO

Is the HP_PLUG signal input to [91/HP_PLUG] of IC4405 from pin (6) of J504? — NO → Check the line between J504 and IC4405.

↓ YES

Is HP/MONI_MUTE [AJ11 of IC3302 (Digital AV decode & Main CPU)] or MUTE_A_ALL [21pin of IC2002 (UCOM)] at “H”? — YES → Check the peripheral circuits of IC3302 and HP-MUTE_LINE. (D527, Q506, etc.)

↓ NO

Is audio signal (HP_L/R) input to pins (M28/HP/MONI_L, M27/HP/MONI_R) of IC3302? — YES → Check the line between IC3302 and J504.

↓ NO

Check IC3302 and its peripheral circuits.

Does not the sound of the audio signal output to Audio out mode go out?

↓

Check whether it is selected “Audio out” by Headphone/Audio out select under Menu-Setup-Option-Input terminal setting.

↓ YES

↓ YES

Check the setting of an external input device that connects with J504.

No sound from external output device (3)

↓

No sound from DIGITAL AUDIO OUTPUT terminal.

↓

Is the audio signal output to pins (1) of sound output terminal (D520)? — YES → Check D520 and peripheral circuits.

↓ NO

Is SPDIF_MUTE signal SPDIF_MUTE [H29/IC3302] or MUTE_A_ALL [21pin of IC2002 (UCOM)] at “H”? — YES → Check the peripheral circuits of IC3302 and SPDIF_MUTE. (Q505, D530, etc.)

↓ NO

Is an audio signal input to pin (2) of IC503 from [J28/SPDIF_OUT] of IC3302 and is the logic signal input into pin (1) of IC503? — YES → Check the IC503 and peripheral circuits.

↓ NO

Check IC3302 and its peripheral circuits.

No sound from external output device (4)

↓

Does not the sound of the audio signal output to HDMI1 go out?

↓

Is the audio signal output to pins (14) of SC1503 (HDMI1 terminal)? — YES → Check SC1503 and peripheral circuits.

↓ NO

Is the audio signal output to pins (8) (10) (12) of IC1508? — YES → Check the line between SC1503 and IC1508.

↓ NO

Is the audio signal input to pins (9) (11) (13) of IC1508?
Is the audio signal output to pins (6) of IC1508?
Is the audio signal input to pins (5) of IC1508? — YES → Check IC1508 and peripheral circuits.

↓ NO

Is the audio signal output to pins (4) of IC1505? — YES → Check the line between IC1508 and IC1505.

↓ NO

Is SPDIF_MUTE signal ARC_MUTE [AK2/IC3302] or MUTE_A_ALL [21pin of IC2002 (UCOM)] at “H”? — YES → Check the peripheral circuits of IC3302 and ARC_MUTE. (Q1501, D1513, etc.)

↓ NO

Is an audio signal input to pin (2) of IC1505 from [J28/SPDIF_OUT] of IC3302 and is the logic signal input into pin (1) of IC1505? — YES → Check the IC1505 and peripheral circuits.

↓ NO

Check IC3302 and its peripheral circuits.

No picture on the display (1)

↓

The picture doesn't appear in all modes.

↓

Is the LVDS signal output from IC3302 (DIGITAL_AV_DECODER_&_MAIN_CPU_&_VIDEO PROCESSER) respectively?
LVDS0_D0N/P (D14/C14), LVDS0_D1N/P (D15/C15), LVDS0_D2N/P (D16/C16), LVDS0_CLKN/P_83MHz (D17/C17), LVDS0_D3N/P (D18/C18), LVDS0_D4N/P (D19/C19), LVDS1_D0N/P (B14/A14), LVDS1_D1N/P (B15/A15), LVDS1_D2N/P (B16/A16), LVDS1_CLKN/P_83MHz (B17/A17), LVDS1_D3N/P (B18/A18), LVDS1_D4N/P (B19/A19)

↓ NO

Check IC3302 and its peripheral control circuits.
(IC2002, IC3501, IC3502, X3302, etc.)

↓ YES

Is the above-mentioned LVDS signal output to connector P2601? → NO → Check the line between IC3302 and P2601.

↓ YES

Similarly, is LCD controler's control signal normal? → NO → Please check each control signal of DET_POW (DET_PNL12V), PE. (PNL_EN)

↓ YES

PANEL_UNIT:
Is the LVDS signal input to connector LW of the panel module? → NO → NO Wire harness (LW) is checked.

↓ YES

Check the panel module.

No picture on the display (2)

↓

Does not the picture come out when VHF/UHF is received?

↓

Is the video signal (TUNER_CVBS) output from pin (16) of TUNER (TU1101)? → NO → Check the tuner and its peripheral circuits.
Replace as required.

↓ YES

Is the video signal (TUNER_CVBS) sent to pin (AD29/ TU_CVBS) of IC3302 (Digital AV decode & Main CPU)? → NO → Check the line between TU1101 and IC3302. (Q1106, etc.)

↓ YES

Refer to “The picture doesn't appear in all modes.”

No picture on the display (3)

↓

Does not the picture come out when DTV is received?

↓

Refer to “No sound (during the reception of TV (DIGITAL) broadcasting).”

No picture on the display (4)

↓

Does not the picture come out when DTV (Satellite) is received?

↓

Refer to “No sound (during the reception of TV (DIGITAL-Satellite) broadcasting).”

[External input EXT1] No picture on the display (5)

↓

Does not the picture of the CVBS signal input to EXT1 go out?

↓

Is CVBS signal sent to pin (14) of EXT1 (SC505)? — NO → Check the setting of an external input device that connects with EXT1.

↓ YES

Is CVBS signal from EXT1 (SC505) sent to pin (AG29/SC1_CVBS_Y) of IC3302 (Digital AV decode & Main CPU)? — NO → Check the line between SC505 and IC3302.

↓ YES

Refer to “The picture doesn't appear in all modes.”

[External input EXT1] No picture on the display (6)

↓

Does not the picture of the Y/C video signal input to EXT1 go out?

↓

Is Y/C video signal sent to pins (14)/Y and (4)/C of EXT1 (SC505)? — NO → Check the setting of an external input device that connects with EXT1.

↓ YES

Is Y/C signal from EXT1 (SC505) sent to pins (AG29/SC1_CVBS_Y) and (AG28/SC1_C1) of IC3302 (Digital AV decode & Main CPU)? — NO → Check the line between SC505 and IC3302.

↓ YES

Refer to “The picture doesn’t appear in all modes.”

[External input EXT1] No picture on the display (7)

↓

Does not the picture of the R/G/B signal input to EXT1 go out?

↓

Is RGB1 signal sent to pins (4)/RGB_IN_RED/C, (6)/RGB_IN_GREEN and (8)/RGB_IN_BLUE of EXT1 (SC505)? — NO → Check the setting of an external input device that connects with EXT1.

↓ YES

Is RGB1 signal from EXT1 (SC505) sent to pins (AH22/RED1), (AJ22/GREEN_1) and (AJ21/BLUE_1) of IC3302 (Digital AV decode & Main CPU)? — NO → Check the line between SC505 and IC3302.

↓ YES

Refer to “The picture doesn’t appear in all modes.”

[External input EXT2] No picture on the display (8)

↓

Does not the picture of the CVBS signal input to EXT2 go out?

↓

Is a CVBS signal input to pin (3) of EXT8 (J505)? — NO → Check the setting of an external input device that connects with EXT2.

↓ YES

Is CVBS signal sent to pin (AE29/CVBS_IN) of IC3302? — NO → Check the line between J505 and IC3302.

↓ YES

Refer to “The picture doesn't appear in all modes.”

[External input EXT3] No picture on the display (9)

↓

Does not the picture of the component video signal input to EXT3 (15pin-D-SUB terminal) go out?

↓

Is it selected “Component” by the Audio setup under Menu-Setup-Option-Input terminal setting - Input select? — NO → Set the “Component”.

↓ YES

Is a COMPONENT video signal input to pins (1)/PC_R_COM, (2)/PC_G_COM, (3)/PC_B_COM of EXT3 (SC501)? — NO → Check the setting of an external input device that connects with EXT3.

↓ YES

Is COMPONENT signal sent to pins (AJ17/PC_R_CM), (AJ16/PC_G_CM) and (AJ15/PC_B_CM) of IC3302? — NO → Check the line between SC501 and IC3302.

↓ YES

Refer to “The picture doesn't appear in all modes.”

[External input EXT3] No picture on the display (10)

↓

Does not the picture of the DVI (ANALOG) video signal input to EXT3 (15pin-D-SUB terminal) go out?

↓

Is it selected “PC (RGB)” by the Audio setup under Menu-Setup-Option-Input terminal setting - Input select? — NO → Set the “PC (RGB)”.

↓ YES

Are the video signal and the synchronized signal input from pin (1, 2, 3)/(PC_R, G, B), (14 and 13)/(V, H.Sync) of EXT4 (SC501)? — NO → Check the connection and setup with the external DVI devices.

↓ YES

Are the video signal and the synchronized signal input from pins (AK17/PC__R) (AK16/PC__G) (AH15/PC__B) and (AK14/PC_HSYNC) (AJ14/PC_VSYNC) of IC3302 (Digital AV decode & Main CPU)? — NO → Check the line between SC501 and IC3302.

↓ YES

Refer to “The picture doesn't appear in all modes.”

[External input HDMI-1/2/3/4] No picture on the display (11)

↓

Does not the picture/sound of the HDMI signal input to HDMI-1/2/3/4 go out?

↓

Is the Hot plug detection function output from pin (19) of the HDMI-1 (SC1503) normal?	NO →	Check the line between SC1503 and pin (45) of IC1504 (HDMI-SW).
Is the Hot plug detection function output from pin (19) of the HDMI-2 (SC1502) normal?	NO →	Check the line between SC1502 and pin (41) of IC1504 (HDMI-SW).
Is the Hot plug detection function output from pin (19) of the HDMI-3 (SC1501) normal?	NO →	Check the line between SC1501 and pin (35) of IC1504 (HDMI-SW).
Is the Hot plug detection function output from pin (19) of the HDMI-4 (SC1505) normal?	NO →	Check the line between SC1505 and pin (31) of IC1504 (HDMI-SW).

↓ NO

Check the setting of an external input device that connects with HDMI-1/2/3/4.

↓ YES

Is EDID data pins (44/HDMI1_SCL), (43/HDMI1_SDA) of IC1504 accessed, and is it read from pins (15, 16) of a HDMI-1 (SC1503)?	NO →	Is access possible in the exchange of IC1504?
Is EDID data pins (40/HDMI2_SCL), (39/HDMI2_SDA) of IC1504 accessed, and is it read from pins (15, 16) of a HDMI-2 (SC1502)?		
Is EDID data pins (34/HDMI3_SCL), (33/HDMI3_SDA) of IC1504 accessed, and is it read from pins (15, 16) of a HDMI-3 (SC1501)?		
Is EDID data pins (30/HDMI4_SCL), (29/HDMI4_SDA) of IC1504 accessed, and is it read from pins (15, 16) of a HDMI-4 (SC1505)?		

↓ NO

Check the peripheral circuit of SC1502/1503/1505/1501and IC1504.

↓ YES

Is TMDS signal input into pins (20, 19/HDMI1_CLKP/N), (22,21/HDMI1_D0P/N), (24, 23/HDMI1_D1P/N), (26, 25/HDMI1_D2P/N) of IC1504 from HDMI-1 (SC1503)?	NO →	Check the line between HDMI-1 (SC1503) and IC1504.
Is TMDS signal input into pins (12, 11/HDMI2_CLKP/N), (14, 13/HDMI2_D0P/N), (16, 15/HDMI2_D1P/N), (18, 17/HDMI2_D2P/N) of IC1504 from HDMI-2 (SC1502)?	NO →	Check the line between HDMI-2 (SC1502) and IC1504.
Is TMDS signal input into pins (2, 1/HDMI3_CLKP/N), (4, 3/HDMI3_D0P/N), (6, 5/HDMI3_D1P/N), (8, 7/HDMI3_D2P/N) of IC1504 from HDMI-3 (SC1501)?	NO →	Check the line between HDMI-3 (SC1501) and IC1504.
Is TMDS signal input into pins (66, 65/HDMI4_CLKP/N), (68, 67/HDMI4_D0P/N), (70, 69/HDMI4_D1P/N), (72, 71/HDMI4_D2P/N) of IC1504 from HDMI-4 (SC1505)?	NO →	Check the line between HDMI-4 (SC1505) and IC1504.

↓ YES

Are TMDS_Rx and the I2C_SINK signal output from Pins (62, 63/SW_TMDS_CLKP/N), (60, 61/SW_TMDS_D0P/N), (58, 59/SW_TMDS_D1P), (56, 57/SW_TMDS_D2P) of IC1504 respectively?	NO →	Check the IC1504 and peripheral circuits.

↓ YES

Are the TMDS_Rx/ I2C_SINK signal input to Pins [(AK6, AJ6/SW_TMDS_CLKP/N), (AK7, AJ7/SW_TMDS_D0P/N), (AK8, AJ8/SW_TMDS_D1P/N), (AK9, AJ9/SW_TMDS_D2P/N)] of IC3302 (Digital AV decode & Main CPU) from IC1504?	NO →	Check the line between IC1504 and IC3302.

↓ YES

Refer to “The picture doesn't appear in all modes.” or “No sound output in all modes.”

<During external connection> No picture on the monitor

↓

No picture appears on EXT1connected monitor during the ATV/DTV reception.

↓

Is CVBS signal output into pin (2) of EXT1 (SC505)? — YES → Check the setting of an external input device that connects with EXT1.

↓ NO

Is CVBS signal output to pin (2) of IC504? — YES → Check the line between SC505 and IC504.

↓ NO

Is TU_OUT_CVBS_MUTE [pin (1) of IC504] at “H”? — YES → Check the peripheral circuits of IC4405.

↓ NO

Is CVBS signal input to pin (6) of IC504? — YES → Check the IC504 and their peripheral circuits.

↓ NO

Is CVBS signal output to pin (AK24/CVBS_TU_OUT) of IC3302 (Digital AV decode & Main CPU)? — YES → Check the line between IC504 and IC4405.

↓ NO

In the case that No picture appears on EXT1connected monitor during the ATV reception., refer to (A)
In the case that No picture appears on EXT1connected monitor during the DTV reception., refer to (B)

↓ (A) Refer to “No picture on the display (2)”

↓ (B) Refer to “No picture on the display (3)”

[External input Network] No picture on the display

↓

Does not the signal input to Network go out?

↓

Does the signal in/output to pins (1), (2), (3), (6) of LAN-jack (J9501)? — NO → Check the interface device and peripheral circuits. (power-LED of hub, LINK-LED of hub)

↓ YES

Does the signal in/out to pins (12, 11/TX+-), (10, 9/RX+-) of IC9501? — NO → Check the line between J9501 and IC9501.

↓ YES

Does the signal in/output to pins [18, 19, 47, 29, 41, 27, 23, 22/ ONDA6~13], [21, 20, 35, 36, 38, 39, 34/ONDD8~14], [28, 33/ N_ONDCE0, N_ONDCE1] of IC9501? — NO → Check IC9501 and its peripheral circuits.

↓ YES

Does the signal in/output to pins [A8, B8, C9, C8, A7, F10, A4, B4/ONDA6~13], [D13, F13, D11, E11, F12, E12, E13/ ONDD8~14], [C6, B3/N_ONDCE0, N_ONDCE1] of IC3302 (Digital AV decode & Main CPU)? — NO → Check the line between X9501 and IC9501. Check the crystal X9501. (SCA219WJ)

↓ YES

Check IC9501 and its peripheral circuits.

No light (Back Light doesn't light)

Is the AC cord connector tightly connected to the set?
NO → Reconnect the AC cord tightly and turn on the power again.

YES

Are the wire harnesses and other cables properly connected in the set?
NO → Reconnect the wire harnesses and other cables properly in the set.

YES

Does Power starts up (central Icon LED lights up)?
NO → Refer to “No power (central Icon LED failure to light up) or no startup (central Icon LED failure is flashing)”

YES

Is there the pins (12/PNL_POW) of P9601 at “H”?
NO → Check the power unit, and the signal line between PNL_POW and IC3302.

YES

Is there the pins (8/STB) of P9602 at “H”?
NO → Check the power unit, and the signal line between STB and IC2002.

YES

Replace the power unit.

LCD Panel failure (1)

Does a single or several vertical stripes appear on the LCD screen?

Does a single or several horizontal stripes appear on the LCD screen?

Do luminescent or black dots appear on the screen?

Is the on-screen image rippling or distorted?

Is there any portion which some screens were darkish or became whitish?

Does all LED of one line are not lighting?

Replace the LCD panel or the power unit.

LCD Panel failure (2)

The backlight functions. Does not the image come out in the LCD screen (screen black)?

Does the entire LCD screen look whitish all over?

Does the QS drive function?

Are the data bit dropout? (No solution even when turning on and off the QS drive)

Is the gamma correction as specified?

Replace the LCD_CONT_UNIT.

[2] LED flashing specification at the time of the error

Display method

- Refer to Table 1.
- LED that can be used is only one of the central icons.

  This expresses the error situation by combining blinking at low speed and blinking at high speed.
- For this model, the blinking pattern displayed first is only a low-speed blinking.

  This expresses **a rough content of the error.**
- For this model, details are displayed by high-speed blinking by pushing remote control MENU key.

  This expresses **details of the error.**

  Details are distinguished by the blinking frequency.
- It doesn't return to the outline display again (blink at low speed) by pushing the MENU key (The toggle is not done).

  Please confirm “MONITOR ERR CAUSE” of the adjustment Process mode (1/21), when the error doesn't reproduce by having returned from the error.
- The process of the upgrade is expressed by the brightness of point LED that smoothness changes.
- The upgrade completion is expressed by the LED brightness that changes in a staircase pattern.

LED flashing method

<Examination for a rough content of the error>

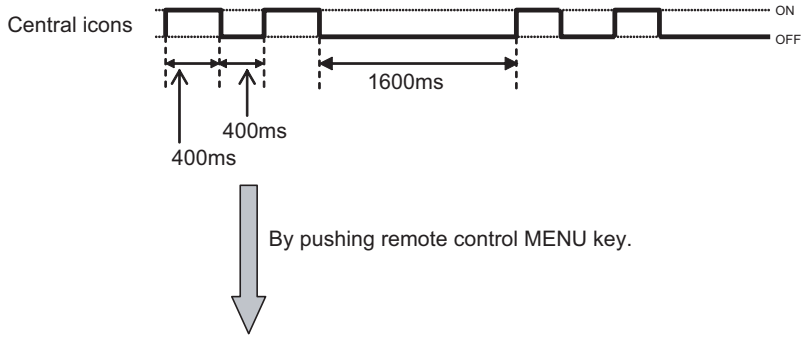

<Examination for details of the error>

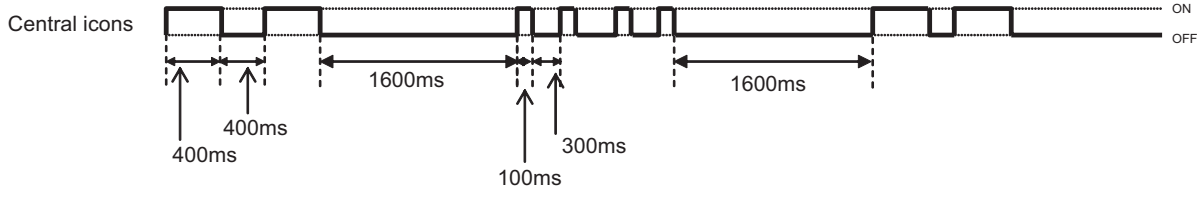

<Upgrade executing>

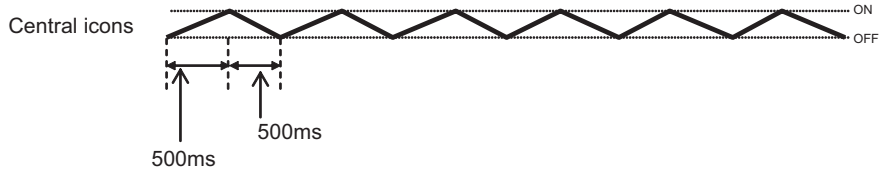

<Upgrade completion>

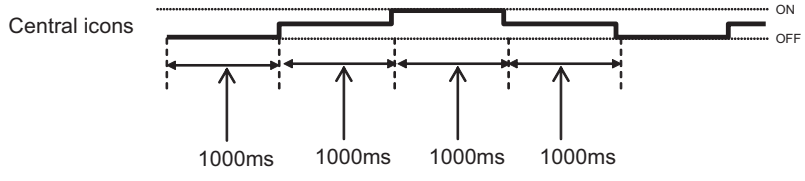

Table 1. Concrete flashing pattern

Item	Expression for a rough content		Expression for Details		Cause
	low-speed blinking	high-speed blinking	low-speed blinking	high-speed blinking	
Lamp system failure	Flashes once	—	Flashes once	Flashes once	Lamp error
Power PWB failure (Power failure, etc.)	Flashes twice	—	Flashes twice	Flashes once	Power Error 1 AC_DET error (*2)
				Flashes twice	Power Error 2 UR+13.5V error (*2)
				Flashes 3 times	Power Error 3 D3.3V error (*2)
				Flashes 5 times	Panel power supply error
Main PWB failure (Communication failure, etc.)	Flashes 3 times	—	Flashes 3 times	Flashes once	Initial communication error
				Flashes twice	Start-up confirmation communication error
				Flashes 3 times	Regular communication error
				Flashes 5 times	Other communication error
Others	Flashes 4 times	—	Flashes 4 times	Flashes once	Temperature error
				Flashes twice	Sync error
				Flashes 3 times	Notification from the main microprocessor (*3)
Upgrade executing	smoothness changes.	—	—	—	Version upgrading
Upgrade completion	a staircase pattern.	—	—	—	Version upgrade succeeded
Upgrade failed	—	Flashing (Continuous)	—	—	Version upgrade failed
ROM data failure	—	Flashing (Continuous)	—	—	Start-up after failing version upgrade (*4)

*2: It depends on the system. The power supply error suitable for the product is defined.

*3: For details, refer to ERROR STANDBY CAUSE on the adjustment process screen.

*4: If the boot section is abnormal, there is no flashing (flashing disabled).

MONITOR ERR STBY table

Outline: Communication/Power failure detected by the monitor microprocessor (IC2002) is stored on EEPROM, states can be confirmed in the adjustment process mode.

Location: Page 1/21 of the adjustment process mode: MONITOR ERR CAUSE “0” if there is no error. It is cleared to 0 on the page (2/21) of the adjustment process mode.

Display	Error description	
02	Start-up communication error 2	Initial communication from the main CPU is not received.
03	Start-up communication error 3	Only the initial communication is received.
04	Start-up communication error 4	Until panel information request reception
05	Start-up communication error 5	Until initialization completion reception
06	Start-up communication error 6	Until version notification transmission
07	Start-up communication error 7	Until start-up information notification transmission
08	Start-up communication error 8	Until start-up information response reception
09	Start-up communication error 9	Until time-out setting reception
0A	Communication error A	REQ time-out
0B	Communication error B	Restart time-out during the beginning of time acquisition start-up
0C	Communication error C	Ending sequence time-out
0D	Communication error D	Preset start-up time-out during completion
0E	Communication error E	Download start-up time-out
0F	Communication error F	Time acquisition time-out
11	Communication error H	Regular communication time-out
16	Panel-related error	Lamp failure
1A	Other error 2	Monitor temperature failure
1D	Power supply error 1	PS_ON (AC_DET) failure
1E	Power supply error 2	D_POW (DET_13V) failure
1F	Power supply error 3	D_POW (DET_D3V3) failure
21	Power supply error 5	Panel power failure
23	Other error 3	Error standby request from the main CPU

LED flashing timing chart at the time of the error

1) Low-speed blinking

Error type	Expression of Central Icon LED	Note: Pins are monitor microprocessor pins (IC2002).
Lamp failure low-speed blinking Flashes once	H: ON L: OFF	Refer to “Lamp failure details”. LOW/High blinking by pressing the [MENU] key on the remote control.
Power failure low-speed blinking Flashes twice	H: ON L: OFF	Refer to “Power failure details”. LOW/High blinking by pressing the [MENU] key on the remote control.
Communication failure with main CPU low-speed blinking Flashes 3 times	H: ON L: OFF	Refer to “Communication failure details”. LOW/High blinking by pressing the [MENU] key on the remote control. Communication line failure or main CPU communication failure.
Others low-speed blinking Flashes 4 times	H: ON L: OFF	Refer to “Other failure details”. LOW/High blinking by pressing the [MENU] key on the remote control.

2) Lamp failure details (Low-speed blinking: Flashes once + High-speed blinking)

Error type	Expression of Central Icon LED	Note: Pins are monitor microprocessor pins unless otherwise specified (IC2002).
Lamp failure Flashes once (High speed)	H: ON L: OFF	ERR_PNL (40pin): Abnormal H. Confirmed after 8 consecutive detections at 64ms intervals (detected only when the backlight is on). NOTE: After 5 detection counts, the lamp cannot be activated except in the monitoring process. To confirm the problem, “Lamp Error detection off-mode” is prepared. This mode compulsorily starts the set disregarding the count. Please refer to [ADJUSTMENT PROCEDURE - 9. Lamp Error detection]

3) Power failure details (Low-speed blinking: Flashes twice + High-speed blinking)

Error type	Expression of Central Icon LED	Note: Pins are monitor microprocessor pins unless otherwise specified (IC2002).
PS_ON AC_DET failure Flashes once (High speed)	H: ON L: OFF	AC_DET (72pin: Abnormal (L). If error is detected during start-up or operation, the power is turned on again by interrupt handling (instantaneous blackout processing).
SM_POW Main 13V failure Flashes twice (High speed)	H: ON L: OFF	DET_13V (38pin): Abnormal (L). Main 13V is not applied. If error is detected during start-up or operation, the power is turned on again by polling.
D_POW Digital 3.3V failure Flashes 3 times (High speed)	H: ON L: OFF	DET_D3V3 (36pin): abnormal (L). Digital 3.3V is not applied. If error is detected during start-up or operation, the power is turned on again by polling.
PANEL_POW Panel 12V failure Flashes 5 times (High speed)	H: ON 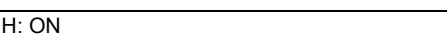 L: OFF	DET_PNL12V (35pin): abnormal (L). DET_PNL12V is not applied. Detection starts after receiving command from Panel Power ON. The power is turned off by polling.

4) Communication failure details (Low-speed blinking: Flashes 3 times + High-speed blinking)

Error type	Expression of Central Icon LED	Note: Basically, debug print logs are analyzed or communication logs are analyzed by a bus monitor.
Initial communication reception failure Flashes once (High speed)	H: ON L: OFF	Initial communication from the main CPU is not received. (Request for the monitor model No. is not received.) → Communication line failure or main CPU start-up failure
Start-up confirmation reception failure Flashes twice (High speed)	H: ON L: OFF	Start-up reason confirmation from the main CPU cannot be received. (Startup communication until start-up reason notification command is not received.) → Main CPU start-up failure or monitor microprocessor reception failure
Regular communication failure Flashes 3 times (High speed)	H: ON L: OFF	Regular communication that is performed at 1 second intervals in the normal operation is interrupted. → Main CPU operation failure or monitor microprocessor reception failure
Other communication failure Flashes 5 times (High speed)	H: ON L: OFF	When a request (PM_REQ=H) is sent from the main microprocessor, the request command is not output from the main CPU, etc. → Main CPU operation failure or monitor microprocessor reception failure

5) Other failure details (Low-speed blinking: Flashes 4 times + High-speed blinking)

Error type	Expression of Central Icon LED	Note: Pins are monitor microprocessor pins unless otherwise specified (IC2002).
Monitor temperature failure Flashes once (High speed)	H: ON 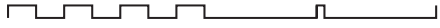 L: OFF	If the panel temperature is 60°C or more for 15s or more in a row, CAUTION appears on the OSD (flashes in red in the lower right screen). If the panel temperature is 60°C or more for 25s or more in a row, error standby is activated. (MONITOR MAX TEMP on page 12/21 of the adjustment process: Change AD value for temperature failure): Thermistor
Main failure Flashes 3 times (High speed)	H: ON L: OFF	Main microprocessor detection error (CPU temperature error, etc.) Details are displayed on page 1/21 of the adjustment process for the main microprocessor.

CHAPTER 6. MAJOR IC INFORMATIONS

[1] MAJOR IC INFORMATIONS

REF NO	Name	Part Code	Description
[MAIN UNIT]			
IC8401	RH-iXD047WJQZQ	Flash	This IC is 1024Mbit NAND flash memory. This IC stores the software data that processes the system of TV such as the graphic processing, the LCD controls, and backlights etc.
IC3302	RH-iXC951WJN1Q	Main CPU	This IC is Video Processor & MAIN CPU. In this IC, the decode processing and the video signal processing are done. Moreover, OSD is generated here and added to a picture signal.
IC2002	RH-iXC786WJQZQ for service (RH-iXC786WJNJQ)	UCOM	The monitor microprocessor is intended to communicate with the main CPU and to operate the system. It also controls power of the entire system.
IC3501/3502	RH-iXC754WJQZQ	DDR	This IC is 1GB DDR2 SDRAM. This IC operates as a memory of IC3302 (Video Processor).
IC501	VHi24LC21AT-1Y for service (RH-iXD108WJQZS)	1K bit E2PROM	This IC is a 1Kbit-2-wire (I2C bus type) serial EEPROM that can be programmed electrically. The EEPROM chip stores the EDID data of PC input. This data is controlled through I2C signals.
IC8455	VHiR24064AS-1Y	64K bit E2PROM	The BR24S64W is a 64Kbit-2-wire (I2C bus type) serial EEPROM that can be programmed electrically. This IC stores the menu data and the adjustment value data of adjustment process mode etc. The data is given out by commands from the main microprocessor.
IC506	VHiM3221EiP-1Y	RS232C-DRIVER	The MAX3221E is a single driver, single receiver RS-232 solution operating from a single Vcc supply. The RS-232 pins provide IEC G1000-4-2 ESD Protection. The device meets the requirements of TIA/EIA-232-F and provides the electrical interface between an asynchronous communication controler and the serial-port connector. The charge pump and four small external capacitors allow operation from a single 3V to 5.5V supply.
IC4405	VHiMT8295AE-1Q	CI controler	This is a control IC for PCMCIA cards. This controls information on IC cards inserted into the PCMCIA card slot (SC4401) or information on software version upgrade cards saved on flash memories to transfer the data to CPUs and memories.
IC2004	VHiR24002AS-1Y	2K bit E2PROM	This is a 2Kbit-2-wire (I2C bus type) serial EEPROM that can be programmed electrically. This IC stores the menu data and the adjustment value data of adjustment process mode etc. The data is given out by commands from the main microprocessor.
IC1504	VHiSii9287+-1Q	HDMI_Port _Processor	The Sii9287 HDMI port processor is the second generation of HDMI devices that support revision 1.3 of the HDMI specification. The main feature is as follows. 1) 4-input, 1-output HDMI port processor. 2) Integrated TMDS receiver and transmitter cores capable of receiving and transmitting at 2.25Gbps. 3) Supports video resolutions up to 1080p, 60Hz, 12bit or 720p/1080i, 120Hz,12bit. 4) Receiver fully comply with DVI1.0, HDCP1.1 and HDMI1.3 specifications.
IC1106	VHiSTV0297E-1Q	QAM Demodulator	The STV0297E's demodulator is a complete QAM (quadrature amplitude modulation) demodulation and FEC (forward error correction) solution that performs IF to transport stream block processing of QAM signals. It is intended for the digital transmission of compressed television, sound, and data services over cable.
IC9501	VHiKSZ8041T-1Y	Ethernet Bus Interface	This IC is a single supply 10Base-T/100Base-TX Physical Layer Transceiver, which provides MII/RMII/SMII interfaces to transmit and receive data.
IC2701	VHiYSS951VZ-1Y	Sound processor	This IC is the Sound processing LSI with built-in two DSP (MDSP/SDSP) and FM (frequency modulation) oscillators. This IC process sound signal and sent it to AMP for Speaker and Woofer.
IC2702/2703	VHiYDA164QZ-1Y	Audio-AMP	This IC is digital audio power amplifier with digital audio interface. The power-supply voltage is corresponded to A.8V~18V and the maximum output is 20Wx2ch.
IC1301	RH-iXC563WJQZY	LNB supply and control	It is IC for amplifying the feeble electric wave sent from satellite broadcasting on the level which can treat a decoder, and changing and processing signal.

MEMO

CHAPTER 7. OVERALL WIRING/BLOCK DIAGRAM

[1] OVERALL WIRING DIAGRAM (LC-40LE814E/RU)

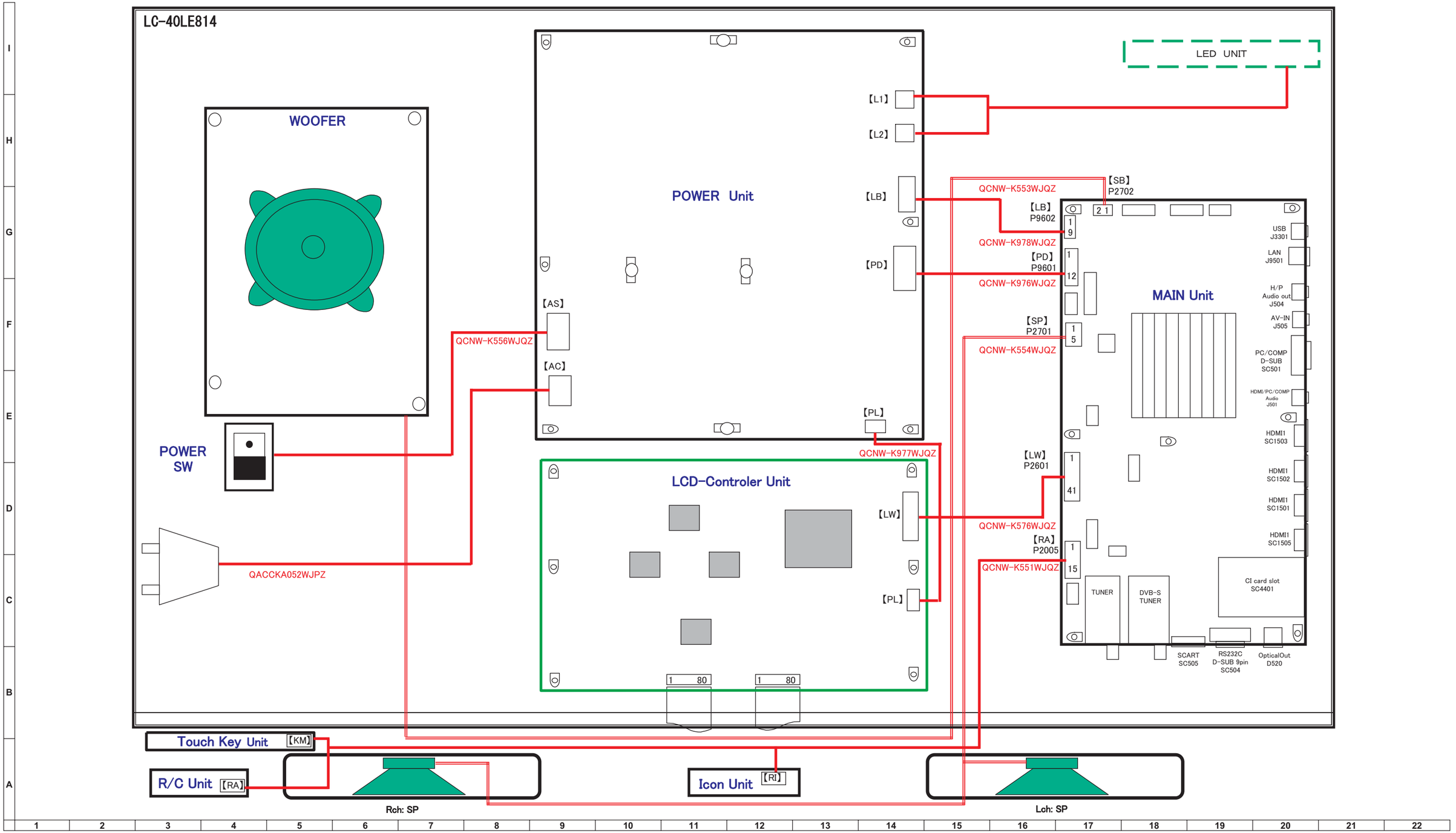

[2] OVERALL WIRING DIAGRAM (LC-46LE814E/RU)

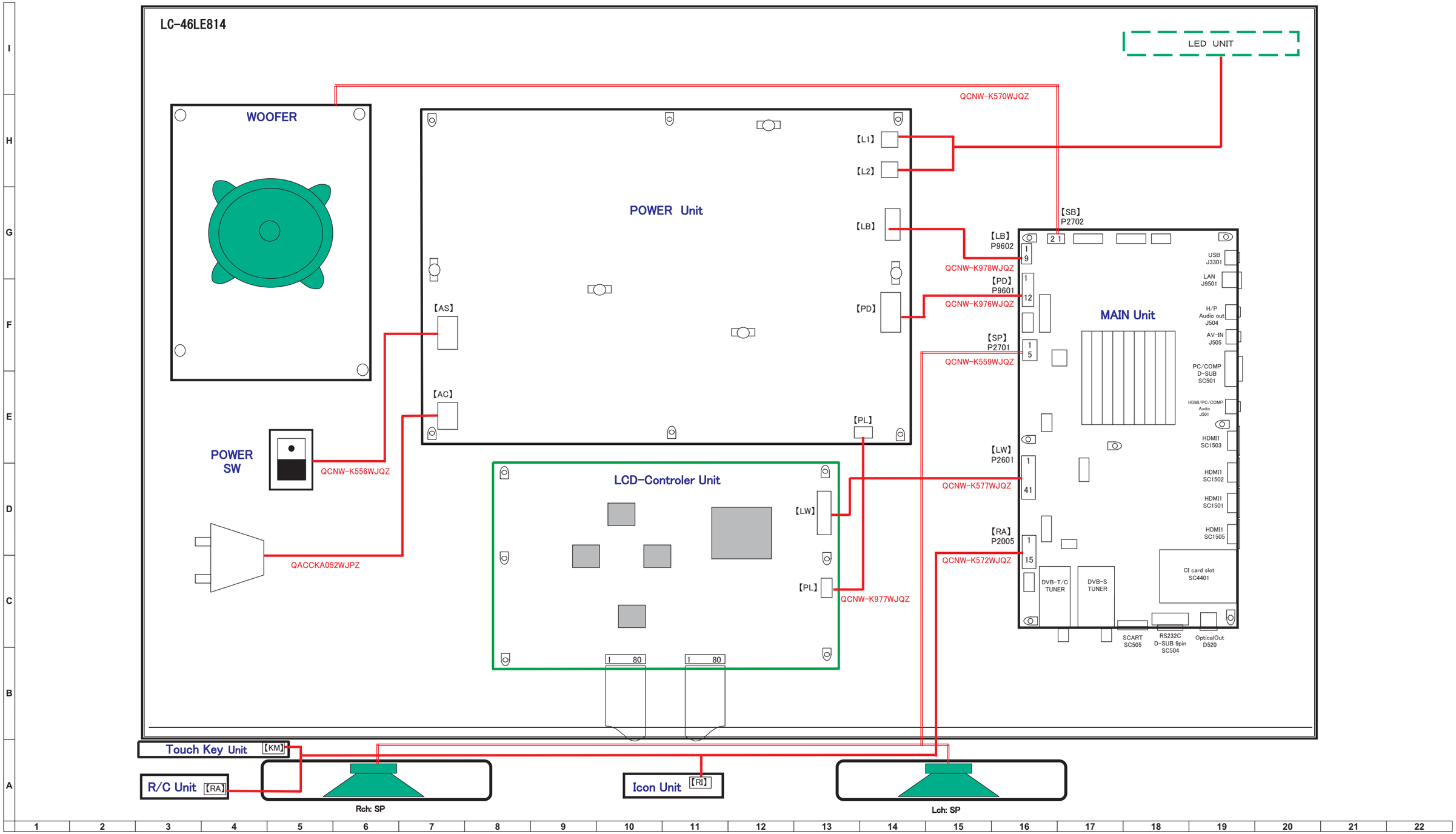

[3] OVERALL WIRING DIAGRAM (LC-40LE824E/RU)

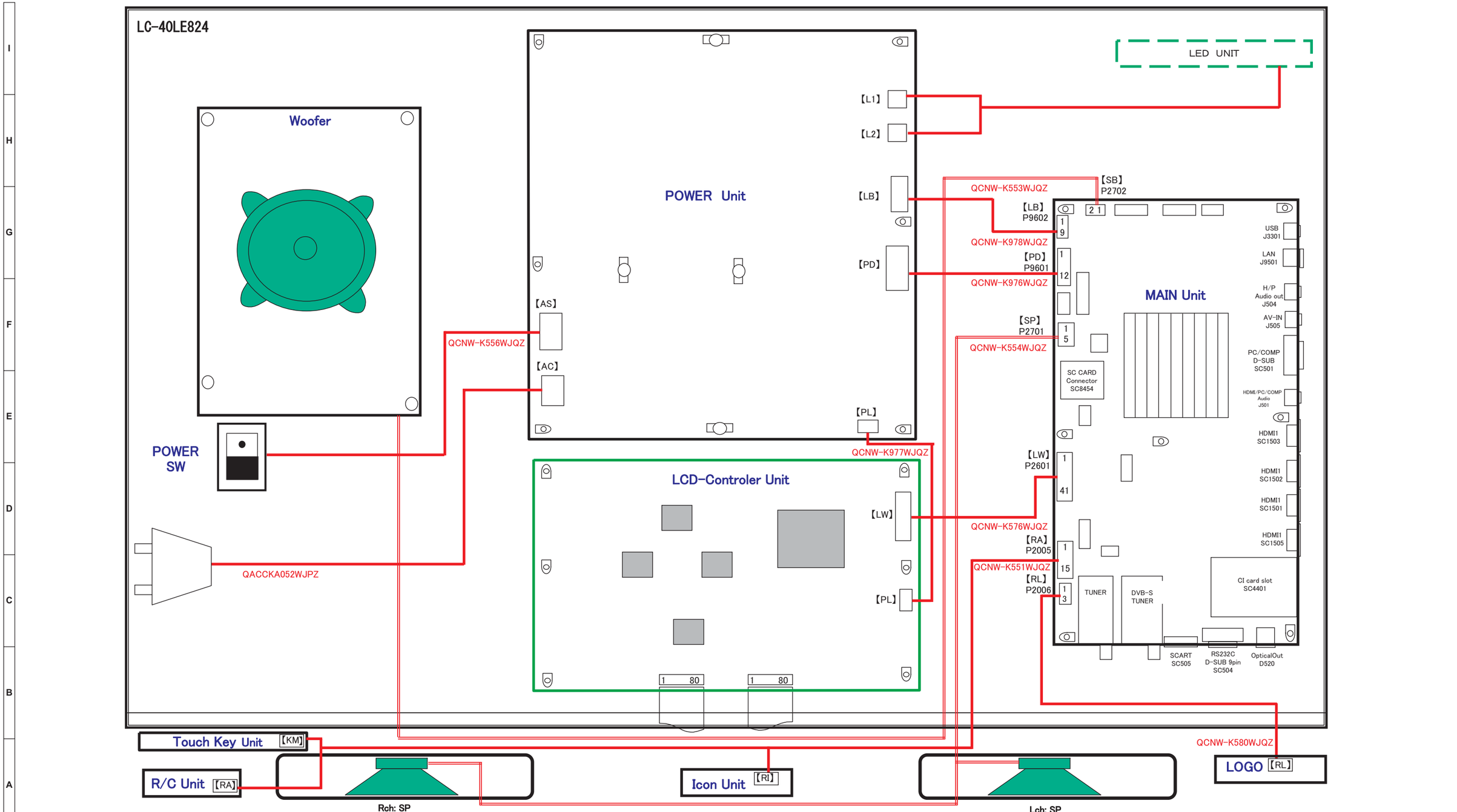

[4] OVERALL WIRING DIAGRAM (LC-46LE824E/RU)

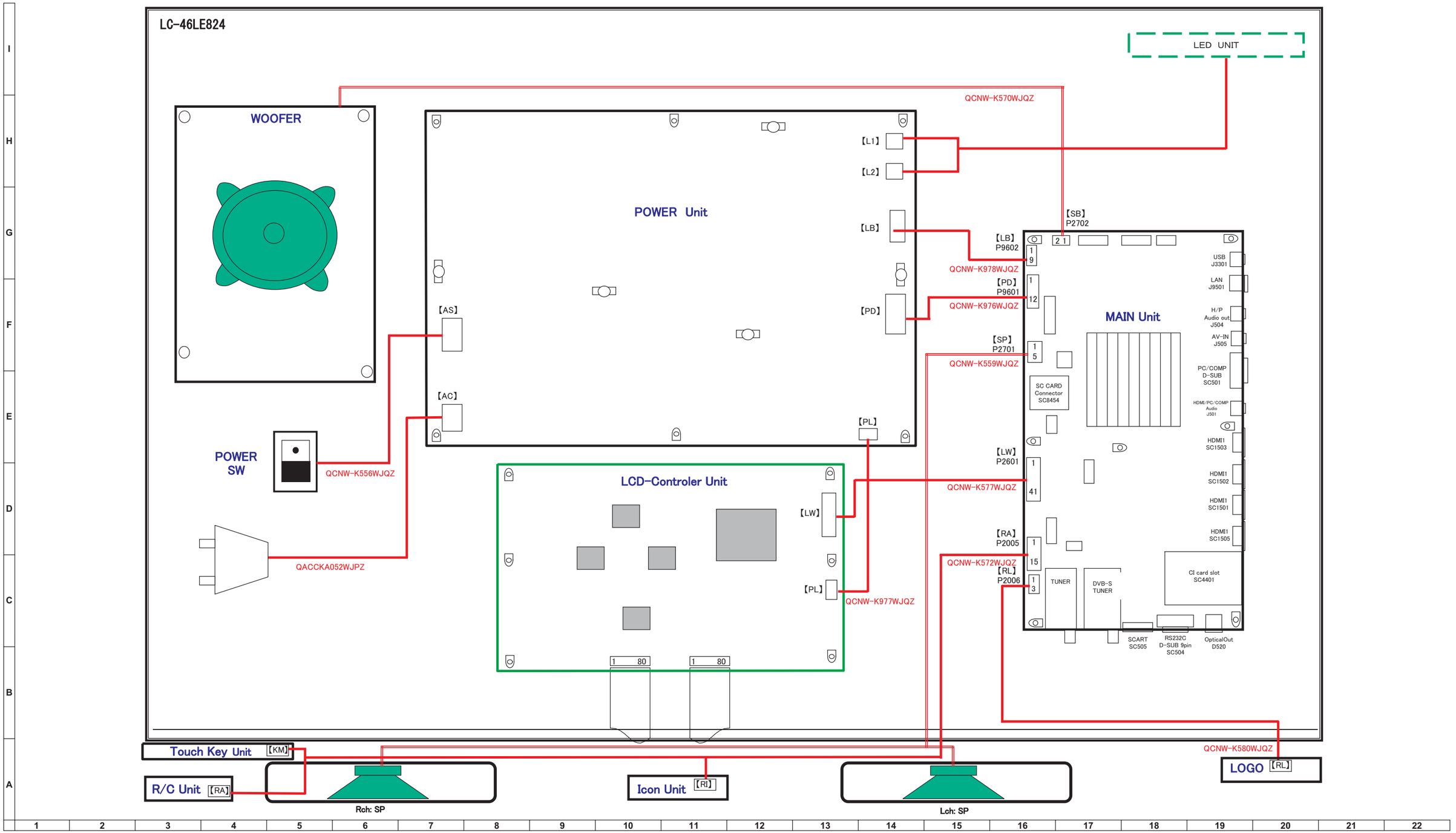

[5] SYSTEM BLOCK DIAGRAM (LC-40LE814E/RU)(LC-46LE814E/RU)

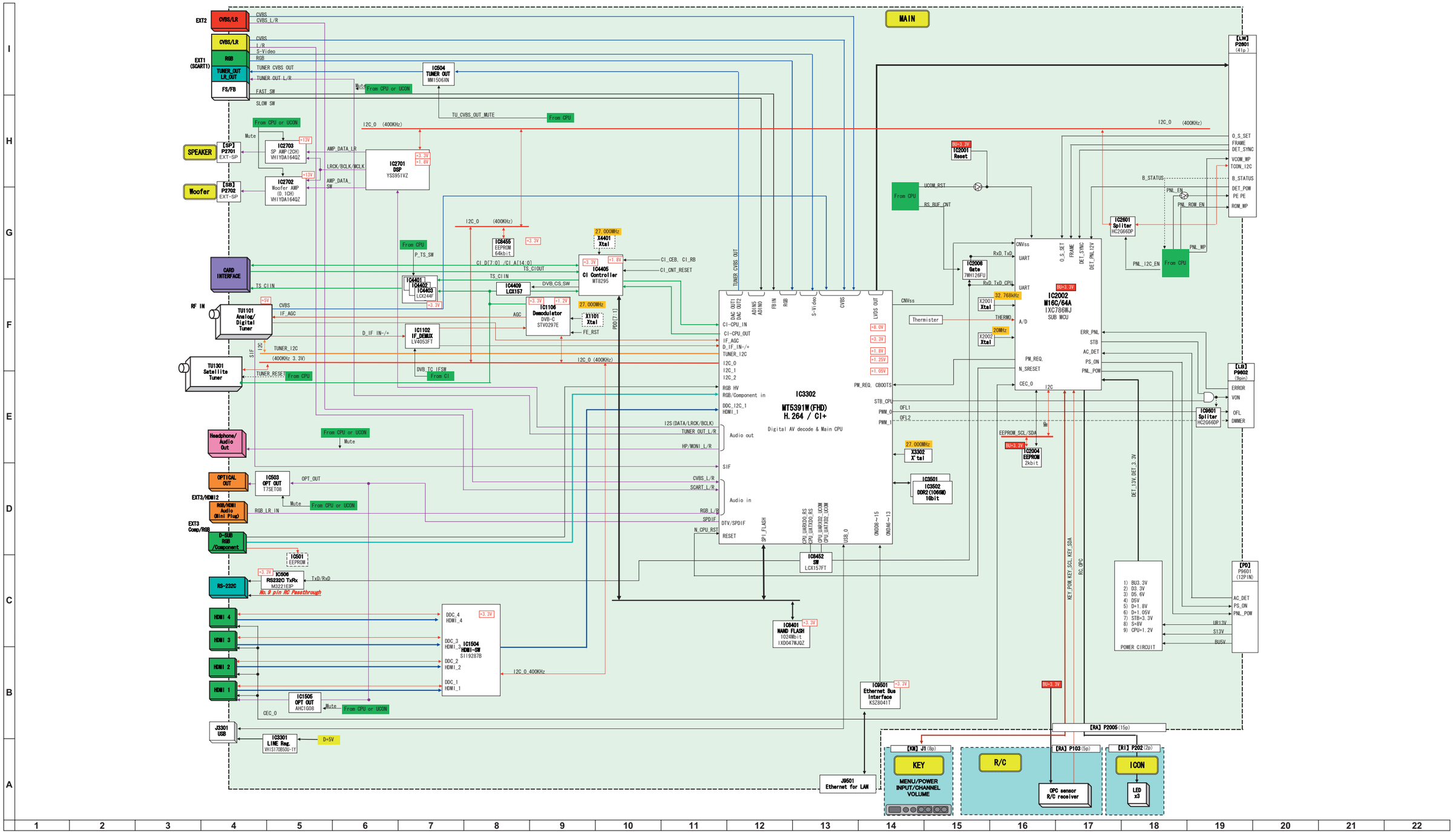

[6] SYSTEM BLOCK DIAGRAM (LC-40LE824E/RU)(LC-46LE824E/RU)

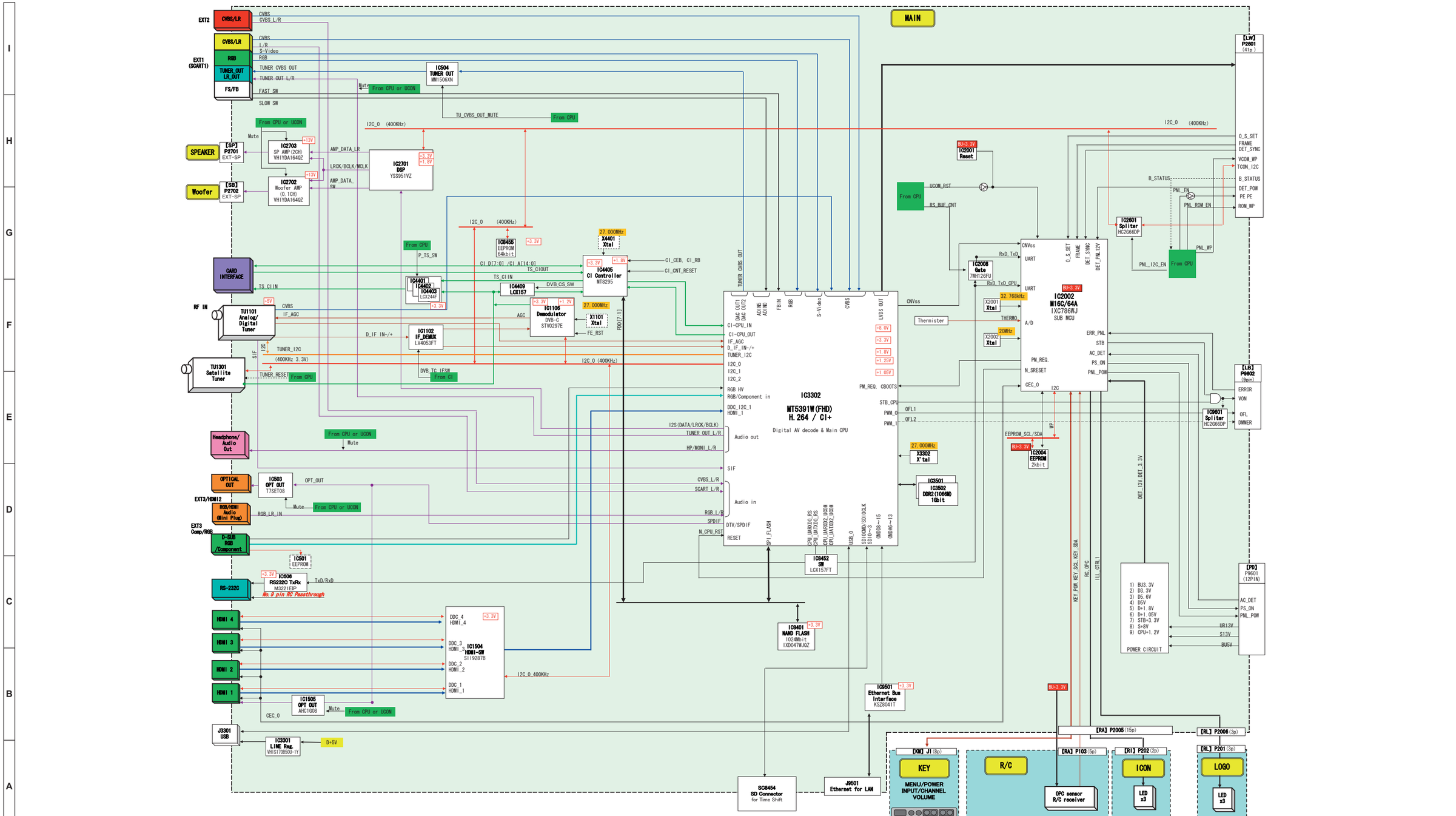

SHARP PARTS GUIDE

No. S90K840LE814E

LCD COLOUR TELEVISION

MODELS

LC-40LE814E/RU
LC-46LE814E/RU
LC-40LE824E/RU
LC-46LE824E/RU

CONTENTS

[1] PRINTED WIRING BOARD ASSEMBLIES

[2] LCD PANEL MODULE

[3] CABINET PARTS (LC-40LE814E/RU)

[4] CABINET PARTS (LC-46LE814E/RU)

[5] CABINET PARTS (LC-40LE824E/RU)

[6] CABINET PARTS (LC-46LE824E/RU)

[7] SUPPLIED ACCESSORIES

[8] PACKING PARTS
(NOT REPLACEMENT ITEM)
(LC-40LE814/824E/RU)

[9] PACKING PARTS
(NOT REPLACEMENT ITEM)
(LC-46LE814/824E/RU)

[10] SERVICE JIGS (USE FOR SERVICING)

Parts marked with "⚠" are important for maintaining the safety of the set. Be sure to replace these parts with specified ones for maintaining the safety and performance of the set.

SHARP CORPORATION

This document has been published to be used
for after sales service only.
The contents are subject to change without notice.

NO.	PARTS CODE	PRICE RANK	NEW MARK	PART DELIVERY	DESCRIPTION
[1] PRINTED WIRING BOARD ASSEMBLIES					
N	DKEYDF455FM11	CG	N	P	MAIN Unit (LC-40LE814E/RU)(LC-46LE814E/RU)
N	DKEYDF455FM12	CL	N	P	MAIN Unit (LC-40LE824E/RU)(LC-46LE824E/RU)
N	DUNTKF493FM03	AM		P	ICON Unit
N	DUNTKF493FM04	AN		P	LOGO Unit (LC-40LE824E/RU)(LC-46LE824E/RU)
N	DUNTKF494FM02	AP		P	R/C, LED Unit
⚠ N	RUNTKA685WJQZ	BT		P	POWER/LED CONTROL Unit (LC-40LE814E/RU)(LC-40LE824E/RU)
⚠ N	RUNTKA686WJQZ	BV		P	POWER/LED CONTROL Unit (LC-46LE814E/RU)(LC-46LE824E/RU)
N	RUNTKA692WJQZ	AU	N	P	TOUCH SENSOR Unit (LC-40LE814E/RU)(LC-46LE814E/RU)
N	RUNTKA761WJQZ	BE	N	P	TOUCH SENSOR Unit (LC-40LE824E/RU)(LC-46LE824E/RU)
N	RUNTK4512TPZC	CA		P	LCD CONTROL Unit (LC-40LE814E/RU)(LC-40LE824E/RU)
N	RUNTK4512TPZG		N	P	LCD CONTROL Unit (LC-46LE814E/RU)(LC-46LE824E/RU)
[2] LCD PANEL MODULE					
N	R1LK400D3LWF2Y	DM	N	P	40" LCD Panel Module Unit (LC-40LE814E/RU)
N	R1LK460D3LWG2Y	DV	N	P	46" LCD Panel Module Unit (LC-46LE814E/RU)
N	R1LK400D3LWF0Y	DM	N	P	40" LCD Panel Module Unit (LC-40LE824E/RU)
N	R1LK460D3LWG0Y	DX	N	P	46" LCD Panel Module Unit (LC-46LE824E/RU)

[3] CABINET PARTS (LC-40LE814E/RU)

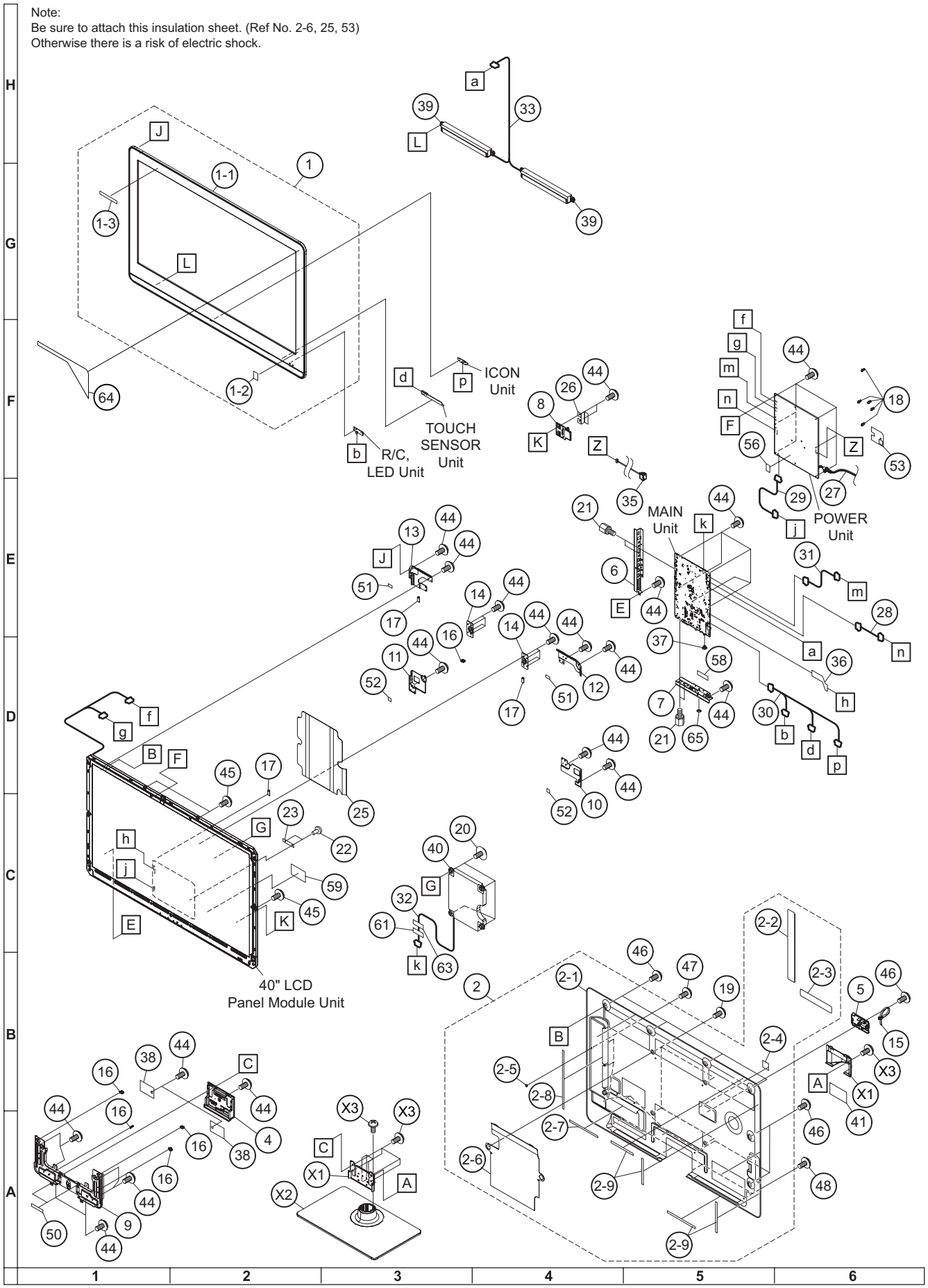

NO.	PARTS CODE	PRICE RANK	NEW MARK	PART DELIVERY	DESCRIPTION
[3] CABINET PARTS (LC-40LE814E/RU)					
1	CCABAC527WJ1A	BX	N	P	Front Cabinet Ass'y (for Europe)
1	CCABAC527WJ1B	BX	N	P	Front Cabinet Ass'y (for Russia)
1-1	Not Available	–		–	Front Cabinet
1-2	TLABZC354WJZZ	AB		P	ECO Label (for Europe)
1-3	TLABZC585WJZZ	AF		J	QUATTRON Label
2	CCABBB698WJ13	BP		P	Rear Cabinet Ass'y
2-1	Not Available	–		–	Rear Cabinet
2-2	HiNDPD710WJSA	AF		P	Terminal Label (Side)
2-3	HiNDPD727WJSA	AD	N	P	Terminal Label (Bottom)
2-4	PSPAHC152WJ1Z	AA		P	Himelon
2-5	PSPAZC461WJZZ	AE		J	Spacer
2-6	Not Available	–	N	–	Insulation Sheet
2-7	PSPAHC159WJZZ	AB		P	Spacer
2-8	PSPAHC160WJZZ	AC		J	Spacer
2-9	PSPAHC194WJZZ	AB	N	P	Spacer, x4
4	GCOVAD696WJ1A	AH		P	Stand Cover
5	GCOVAD699WJ1A	AD		P	AC Cord Cover
6	GCOVAD706WJSA	AL		P	Terminal Angle (Side)
7	GCOVAD711WJSA	AL		P	Terminal Angle (Bottom)
8	GCOVAD709WJ1A	AF		P	ECO Switch Cover
9	LANGKD071WJM1	AX		P	Stand Angle
10	LANGKC743WJFW	AG		J	LCD Angle (Bottom-L)
11	LANGKD011WJFW	AG		P	LCD Angle (Bottom-R)
12	LANGKC745WJFW	AF		J	LCD Angle (Top-L)
13	LANGKC746WJFW	AF		J	LCD Angle (Top-R)
14	LANGKC775WJM1	AL		J	VESA Angle, x2
15	LHLDKA011WJKZ	AD		J	AC Cord Band
16	LHLDWA143WJKZ	AC		J	Wire Holder, x5
17	LHLDWA294WJUZ	AC		J	Wire Holder, x3
18	LHLDZA506WJKZ	AC	N	J	Spacer, x5
19	LX-BZA170WJF9	AC		J	Screw (for VESA/Rear Cabinet Ass'y), x4
20	LX-BZA364WJF7	AB		J	Screw (for Woofer), x4
21	NSFTZA362WJFW	AB		J	Shaft (for PWB/Angle), x4
22	PCLiCA004WJKZ	AC		J	Nylon Rivet, x2
23	PMLT-A636WJZZ	AF		J	Gasket
25	PZETKA548WJKZ	AT		P	Insulation Sheet (Power)
26	PZETKA556WJKZ	AE		P	Insulation Sheet (ECO)
⚠ 27	QACCKA052WJPZ	AL		J	AC Cord
28	QCNW-K976WJQZ	AG		J	Connecting Cord (PD)
29	QCNW-K977WJQZ	AE		J	Connecting Cord (PL)
30	QCNW-K551WJQZ	AU		J	Connecting Cord (RA)
31	QCNW-K978WJQZ	AF		J	Connecting Cord (LB)
32	QCNW-K553WJQZ	AH		J	Connecting Cord (SB)
33	QCNW-K554WJQZ	AL		J	Connecting Cord (SP)
⚠ 35	QCNW-K556WJQZ	AW		P	Connecting Cord (AS)
36	QCNW-K576WJQZ	AU		J	Connecting Cord (LW)
37	QEARZ0057CEFW	AB		J	Earth Spring
38	QEARZA186WJZZ	AG		J	Conductive Tape, x2
39	RSP-ZA474WJZZ	AX		P	Speaker (L/R), x2
40	RSP-ZA476WJZZ	BA		P	Speaker (Woofer)
41	TLABNC117WJZZ	AA		P	Model Label
44	XBPS730P06WS0	AA		J	Screw (for PWB/Angle), x39
45	XBPS730P10WS0	AA		J	Screw (for Panel Angle), x3
46	XBPS830P06WS0	AA		J	Screw (for Rear Cabinet Ass'y), x13
47	XBPS830P14WS0	AB		J	Screw (for Rear Cabinet Ass'y)
48	XEBS840P10000	AF		J	Screw (for Speaker/Rear Cabinet Ass'y), x4
50	PSPAZC648WJKZ	AD	N	P	Spacer, x2
51	PSPAGA931WJKZ	AD		P	Spacer, x2
52	PSPAGA933WJKZ	AC		P	Spacer, x2
53	PZETKA563WJKZ	AF		P	Insulation Sheet (AC)
56	PSPAZC494WJKZ	AH		J	Cooling Sheet
58	PMLT-A578WJZZ	AE		P	Gasket
59	TLABZC453WJZZ	AA		P	Panel Label
61	RCORFA023WJZZ	AK		J	Core
63	RCORF0103CEZZ	AK		J	Ferrite Core
64	TLABZC637WJZZ	AL	N	P	POP Label
65	LX-NZA049WJFN	AC	N	J	Hexagon Nut

[4] CABINET PARTS (LC-46LE814E/RU)

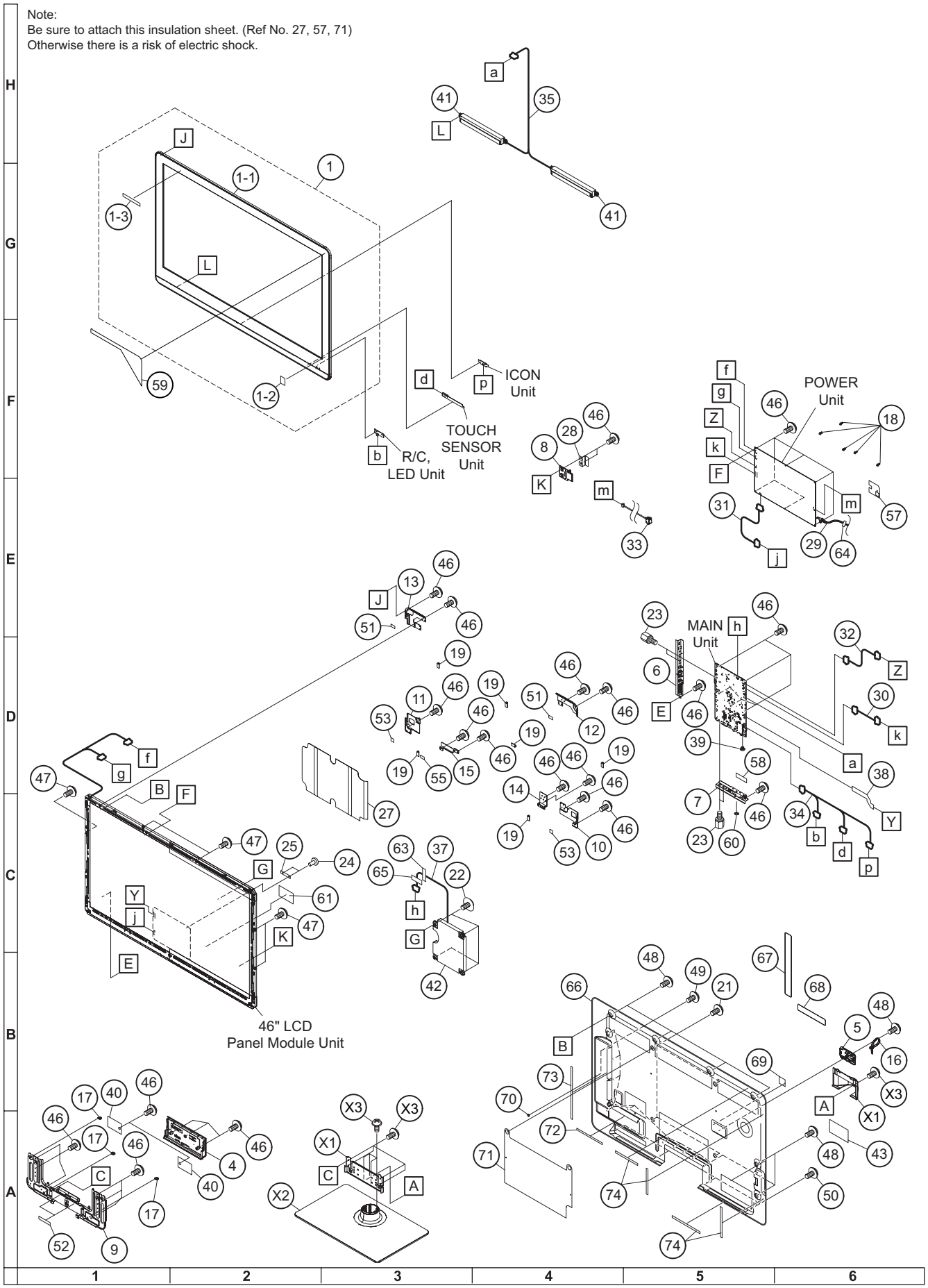

NO.	PARTS CODE	PRICE RANK	NEW MARK	PART DELIVERY	DESCRIPTION
[4] CABINET PARTS (LC-46LE814E/RU)					
1	CCABAC528WJ1A	BY	N	P	Front Cabinet Ass'y (for Europe)
1	CCABAC528WJ1B	BY	N	P	Front Cabinet Ass'y (for Russia)
1-1	Not Available	−		−	Front Cabinet
1-2	TLABZC354WJZZ	AB		P	ECO Label (for Europe)
1-3	TLABZC586WJZZ	AF		J	QUATTRON Label
4	GCOVAD816WJ1A	AK		P	Stand Cover
5	GCOVAD699WJ1A	AD		P	AC Cord Cover
6	GCOVAD706WJSA	AL		P	Terminal Angle (Side)
7	GCOVAD711WJSA	AL		P	Terminal Angle (Bottom)
8	GCOVAD709WJ1A	AF		P	ECO Switch Cover
9	LANGKD013WJ1W	AX		P	Stand Angle
10	LANGKC743WJFW	AG		J	LCD Angle (Bottom-L)
11	LANGKD011WJFW	AG		P	LCD Angle (Bottom-R)
12	LANGKC745WJFW	AF		J	LCD Angle (Top-L)
13	LANGKC746WJFW	AF		J	LCD Angle (Top-R)
14	LANGKC747WJFW	AE		J	LCD Angle (B-C-A)
15	LANGKC811WJFW	AE		J	LCD Angle (B-C-B)
16	LHLDKA011WJKZ	AD		J	AC Cord Band
17	LHLDWA143WJKZ	AC		J	Wire Holder, x3
18	LHLDZA506WJKZ	AC	N	J	Spacer, x6
19	LHLDWA294WJUZ	AC		J	Wire Holder, x6
21	LX-BZA170WJF9	AC		J	Screw (for VESA/Rear Cabinet Ass'y), x4
22	LX-BZA364WJF7	AB		J	Screw (for Woofer), x4
23	NSFTZA362WJFW	AB		J	Shaft (for PWB/Angle), x4
24	PCLiCA004WJKZ	AC		J	Nylon Rivet, x2
25	PMLT-A636WJZZ	AF		J	Gasket
27	PZETKA541WJKZ	AW		P	Insulation Sheet (Power)
28	PZETKA556WJKZ	AE		P	Insulation Sheet (ECO)
⚠ 29	QACCKA052WJPZ	AL		J	AC Cord
30	QCNW-K976WJQZ	AG		J	Connecting Cord (PD)
31	QCNW-K977WJQZ	AE		J	Connecting Cord (PL)
32	QCNW-K978WJQZ	AF		J	Connecting Cord (LB)
⚠ 33	QCNW-K556WJQZ	AW		P	Connecting Cord (AS)
34	QCNW-K572WJQZ	AV		J	Connecting Cord (RA)
35	QCNW-K559WJQZ	AK		J	Connecting Cord (SP)
37	QCNW-K570WJQZ	AG		J	Connecting Cord (SB)
38	QCNW-K577WJQZ	AR		J	Connecting Cord (LW)
39	QEARZ0057CEFW	AB		J	Earth Spring
40	QEARZA186WJZZ	AG		J	Conductive Tape, x2
41	RSP-ZA474WJZZ	AX		P	Speaker (L/R), x2
42	RSP-ZA476WJZZ	BA		P	Speaker (Woofer)
43	TLABNC117WJZZ	AA		P	Model Label
46	XBPS730P06WS0	AA		J	Screw (for PWB/Angle), x37
47	XBPS730P10WS0	AA		J	Screw (for Panel Angle), x5
48	XBPS830P06WS0	AA		J	Screw (for Rear Cabinet Ass'y), x17
49	XBPS830P14WS0	AB		J	Screw (for Rear Cabinet Ass'y)
50	XEBS840P10000	AF		J	Screw (for Speaker/Rear Cabinet Ass'y), x4
51	PSPAGA931WJKZ	AD		P	Spacer, x2
52	PSPAZC492WJKZ	AC		J	Spacer, x2
53	PSPAGA933WJKZ	AC		P	Spacer, x2
55	PSPAGA892WJKZ	AD		J	Spacer
57	PZETKA563WJKZ	AF		P	Insulation Sheet (AC)
58	PMLT-A578WJZZ	AE		P	Gasket
59	TLABZC637WJZZ	AL	N	P	POP Label
60	LX-NZA049WJFN	AC	N	J	Hexagon Nut
61	TLABZC453WJZZ	AA		P	Panel Label
63	RCORF0103CEZZ	AK		J	Ferrite Core
64	RCORFA020WJZZ	AN		J	Core (for AC Cord)
65	RCORFA023WJZZ	AK		J	Core
66	GCABBB699WJSA			P	Rear Cabinet
67	HiNDPD710WJSA	AF		P	Terminal Label (Side)
68	HiNDPD727WJSA	AD		P	Terminal Label (Bottom)
69	PSPAHC152WJ1Z	AA		P	Himelon
70	PSPAZC461WJZZ	AE		J	Spacer
71	PZETKA569WJKZ	AZ	N	P	Insulation Sheet
72	PSPAHC159WJZZ	AB		P	Spacer
73	PSPAHC160WJZZ	AC		J	Spacer
74	PSPAHC194WJZZ	AB	N	P	Spacer, x4

[5] CABINET PARTS (LC-40LE824E/RU)

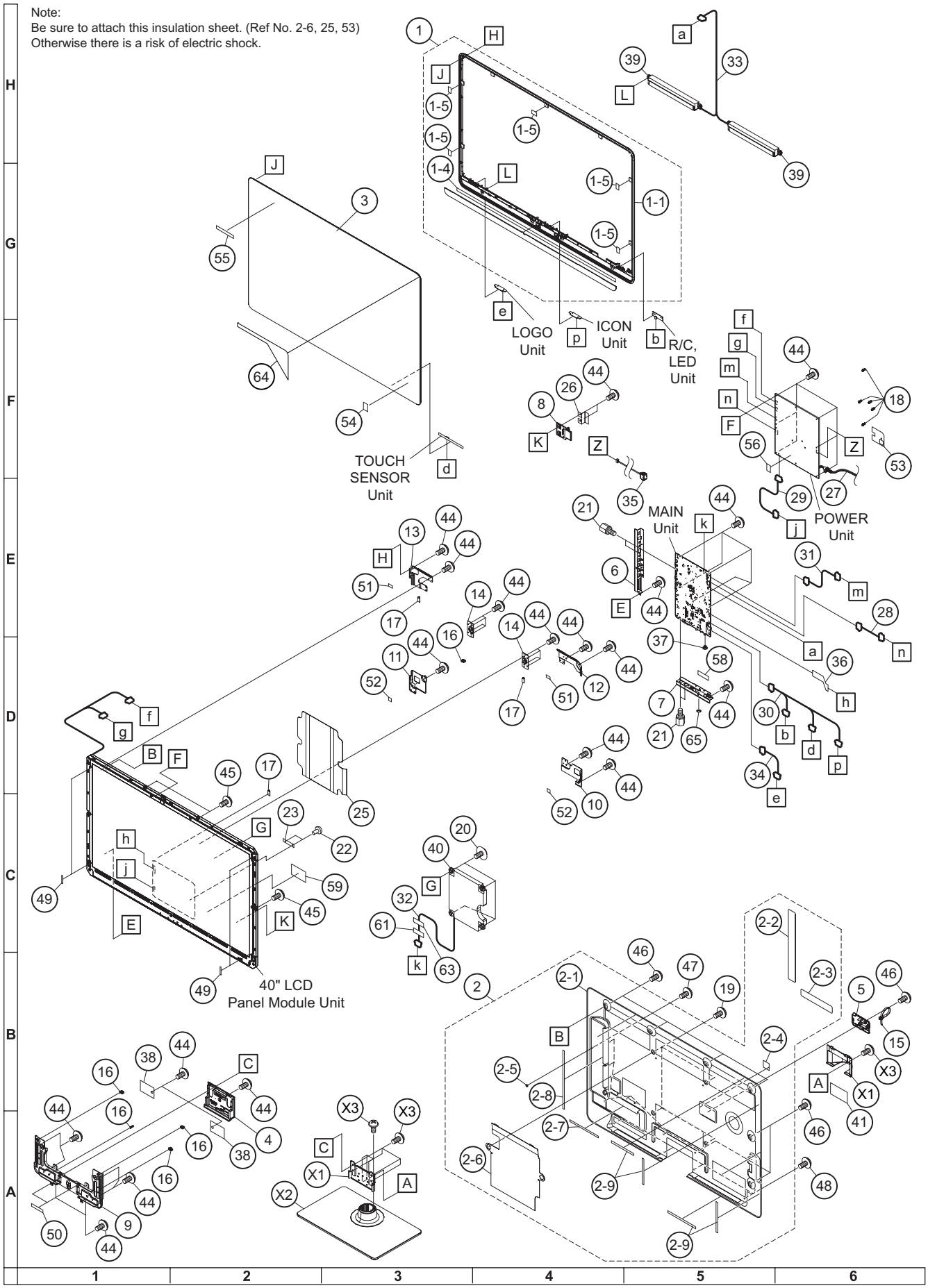

NO.	PARTS CODE	PRICE RANK	NEW MARK	PART DELIVERY	DESCRIPTION
[5] CABINET PARTS (LC-40LE824E/RU)					
1	CCABAC621WJ12	BR	N	P	Front Cabinet Ass'y
1-1	Not Available	–	N	–	Front Cabinet
1-4	PSPAGA906WJZZ	AD		J	Spacer
1-5	PSPAZC495WJZZ	AB		J	Double Side Tape, x5
2	CCABBB698WJ13	BP		P	Rear Cabinet Ass'y
2-1	Not Available	–		–	Rear Cabinet
2-2	HiNDPD710WJSA	AF		P	Terminal Label (Side)
2-3	HiNDPD727WJSA	AD	N	P	Terminal Label (Bottom)
2-4	PSPAHC152WJ1Z	AA		P	Himelon
2-5	PSPAZC461WJZZ	AE		J	Spacer
2-6	Not Available	–	N	–	Insulation Sheet
2-7	PSPAHC159WJZZ	AB		P	Spacer
2-8	PSPAHC160WJZZ	AC		J	Spacer
2-9	PSPAHC194WJZZ	AB	N	P	Spacer, x4
3	CPNLHA019WE14	CD	N	P	Glass Front Panel Ass'y
4	GCOVAD696WJ1A	AH		P	Stand Cover
5	GCOVAD699WJ1A	AD		P	AC Cord Cover
6	GCOVAD706WJSA	AL		P	Terminal Angle (Side)
7	GCOVAD711WJSA	AL		P	Terminal Angle (Bottom)
8	GCOVAD709WJ1A	AF		P	ECO Switch Cover
9	LANGKD071WJM1	AX		P	Stand Angle
10	LANGKC743WJFW	AG		J	LCD Angle (Bottom-L)
11	LANGKD011WJFW	AG		P	LCD Angle (Bottom-R)
12	LANGKC745WJFW	AF		J	LCD Angle (Top-L)
13	LANGKC746WJFW	AF		J	LCD Angle (Top-R)
14	LANGKC775WJM1	AL		J	VESA Angle, x2
15	LHLDKA011WJKZ	AD		J	AC Cord Band
16	LHLDWA143WJKZ	AC		J	Wire Holder, x5
17	LHLDWA294WJUZ	AC		J	Wire Holder, x3
18	LHLDZA506WJKZ	AC	N	J	Spacer, x5
19	LX-BZA170WJF9	AC		J	Screw (for VESA/Rear Cabinet Ass'y), x4
20	LX-BZA364WJF7	AB		J	Screw (for Woofer), x4
21	NSFTZA362WJFW	AB		J	Shaft (for PWB/Angle), x4
22	PCLiCA004WJKZ	AC		J	Nylon Rivet, x2
23	PMLT-A636WJZZ	AF		J	Gasket
25	PZETKA548WJKZ	AT		P	Insulation Sheet (Power)
26	PZETKA556WJKZ	AE		P	Insulation Sheet (ECO)
⚠1 27	QACCKA052WJPZ	AL		J	AC Cord
28	QCNW-K976WJQZ	AG		J	Connecting Cord (PD)
29	QCNW-K977WJQZ	AE		J	Connecting Cord (PL)
30	QCNW-K551WJQZ	AU		J	Connecting Cord (RA)
31	QCNW-K978WJQZ	AF		J	Connecting Cord (LB)
32	QCNW-K553WJQZ	AH		J	Connecting Cord (SB)
33	QCNW-K554WJQZ	AL		J	Connecting Cord (SP)
34	QCNW-K580WJQZ	AE		P	Connecting Cord (RL)
⚠1 35	QCNW-K556WJQZ	AW		P	Connecting Cord (AS)
36	QCNW-K576WJQZ	AU		J	Connecting Cord (LW)
37	QEARZ0057CEFW	AB		J	Earth Spring
38	QEARZA186WJZZ	AG		J	Conductive Tape, x2
39	RSP-ZA474WJZZ	AX		P	Speaker (L/R), x2
40	RSP-ZA476WJZZ	BA		P	Speaker (Woofer)
41	TLABNC117WJZZ	AA		P	Model Label
44	XBPS730P06WS0	AA		J	Screw (for PWB/Angle), x39
45	XBPS730P10WS0	AA		J	Screw (for Panel Angle), x3
46	XBPS830P06WS0	AA		J	Screw (for Rear Cabinet Ass'y), x13
47	XBPS830P14WS0	AB		J	Screw (for Rear Cabinet Ass'y)
48	XEBS840P10000	AF		J	Screw (for Speaker/Rear Cabinet Ass'y), x4
49	PSPAGA888WJZZ	AB		J	Spacer, x4
50	PSPAZC648WJKZ	AD	N	P	Spacer, x2
51	PSPAGA931WJKZ	AD		P	Spacer, x2
52	PSPAGA933WJKZ	AC		P	Spacer, x2
53	PZETKA563WJKZ	AF		P	Insulation Sheet (AC)
54	TLABZC354WJZZ	AB		P	ECO Label (for Europe)
55	TLABZC585WJZZ	AF		J	QUATTRON Label
56	PSPAZC494WJKZ	AH	N	J	Cooling Sheet
58	PMLT-A578WJZZ	AE		P	Gasket
59	TLABZC453WJZZ	AA		P	Panel Label
61	RCORFA023WJZZ	AK		J	Core
63	RCORF0103CEZZ	AK		J	Ferrite Core
64	TLABZC638WJZZ	AL	N	P	POP Label
65	LX-NZA049WJFN	AC	N	J	Hexagon Nut

[6] CABINET PARTS (LC-46LE824E/RU)

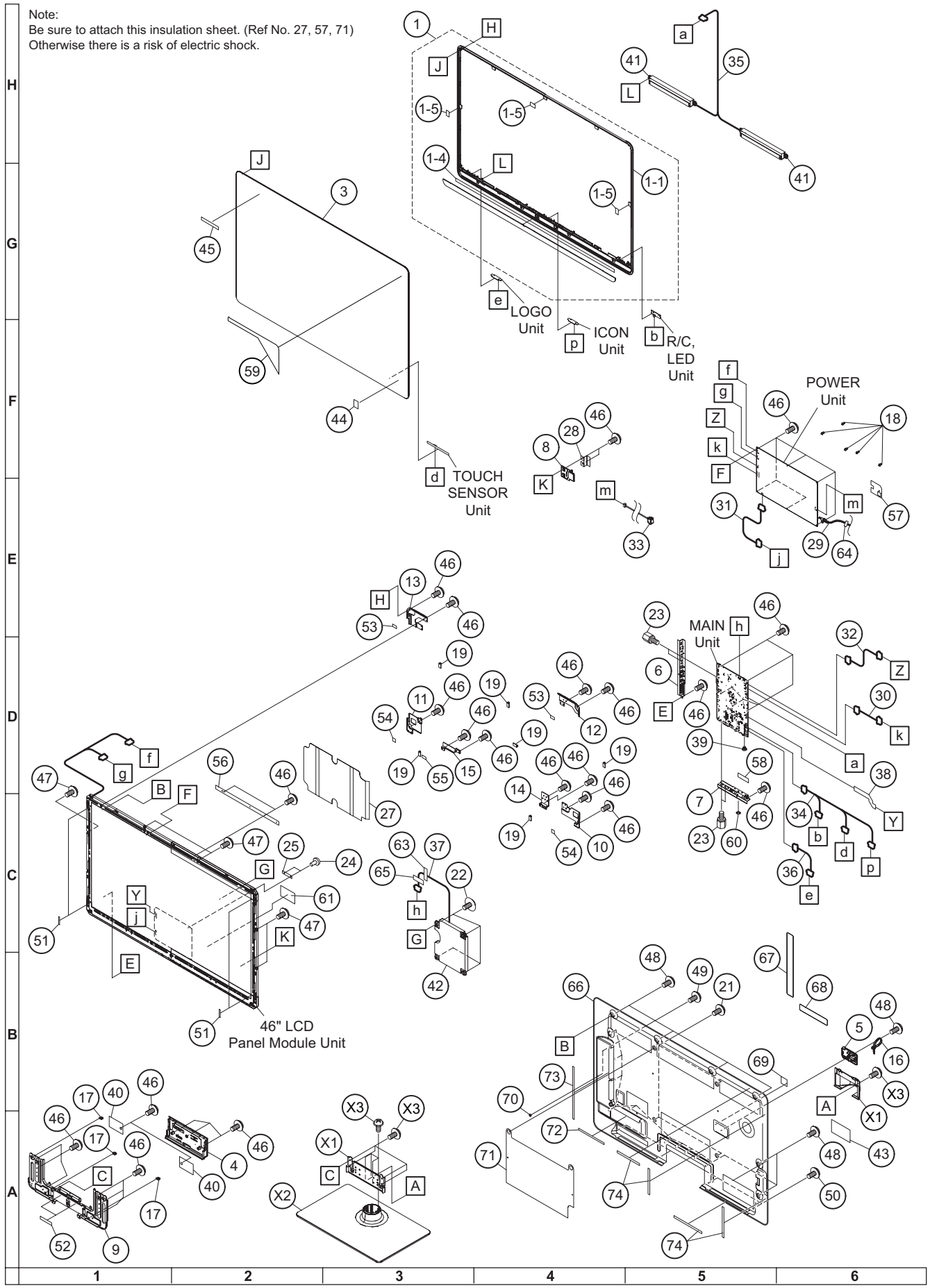

NO.	PARTS CODE	PRICE RANK	NEW MARK	PART DELIVERY	DESCRIPTION
[6] CABINET PARTS (LC-46LE824E/RU)					
1	CCABAC612WJ12	BS	N	P	Front Cabinet Ass'y
1-1	Not Available	–	N	–	Front Cabinet
1-4	PSPAGA907WJZZ	AD		J	Spacer
1-5	PSPAZC495WJZZ	AB		J	Double Side Tape, x3
3	CPNLHA020WJ12	CH	N	P	Glass Front Panel Ass'y
4	GCOVAD816WJ1A	AK		P	Stand Cover
5	GCOVAD699WJ1A	AD		P	AC Cord Cover
6	GCOVAD706WJSA	AL		P	Terminal Angle (Side)
7	GCOVAD711WJSA	AL		P	Terminal Angle (Bottom)
8	GCOVAD709WJ1A	AF		P	ECO Switch Cover
9	LANGKD013WJ1W	AX		P	Stand Angle
10	LANGKC743WJFW	AG		J	LCD Angle (Bottom-L)
11	LANGKD011WJFW	AG		P	LCD Angle (Bottom-R)
12	LANGKC745WJFW	AF		J	LCD Angle (Top-L)
13	LANGKC746WJFW	AF		J	LCD Angle (Top-R)
14	LANGKC747WJFW	AE		J	LCD Angle (B-C-A)
15	LANGKC811WJFW	AE		J	LCD Angle (B-C-B)
16	LHLDKA011WJKZ	AD		J	AC Cord Band
17	LHLDWA143WJKZ	AC		J	Wire Holder, x3
18	LHLDZA506WJKZ	AC	N	J	Spacer, x6
19	LHLDWA294WJUZ	AC		J	Wire Holder, x6
21	LX-BZA170WJF9	AC		J	Screw (for VESA/Rear Cabinet Ass'y), x4
22	LX-BZA364WJF7	AB		J	Screw (for Woofer), x4
23	NSFTZA362WJFW	AB		J	Shaft (for PWB/Angle), x4
24	PCLiCA004WJKZ	AC		J	Nylon Rivet, x2
25	PMLT-A636WJZZ	AF		J	Gasket
27	PZETKA541WJKZ	AW		P	Insulation Sheet (Power)
28	PZETKA556WJKZ	AE		P	Insulation Sheet (ECO)
⚠ 29	QACCKA052WJPZ	AL		J	AC Cord
30	QCNW-K976WJQZ	AG		J	Connecting Cord (PD)
31	QCNW-K977WJQZ	AE		J	Connecting Cord (PL)
32	QCNW-K978WJQZ	AF		J	Connecting Cord (LB)
⚠ 33	QCNW-K556WJQZ	AW		P	Connecting Cord (AS)
34	QCNW-K572WJQZ	AV		J	Connecting Cord (RA)
35	QCNW-K559WJQZ	AK		J	Connecting Cord (SP)
36	QCNW-K580WJQZ	AE		P	Connecting Cord (RL)
37	QCNW-K570WJQZ	AG		J	Connecting Cord (SB)
38	QCNW-K577WJQZ	AR		J	Connecting Cord (LW)
39	QEARZ0057CEFW	AB		J	Earth Spring
40	QEARZA186WJZZ	AG		J	Conductive Tape, x2
41	RSP-ZA474WJZZ	AX		P	Speaker (L/R), x2
42	RSP-ZA476WJZZ	BA		P	Speaker (Woofer)
43	TLABNC117WJZZ	AA		P	Model Label
44	TLABZC354WJZZ	AB		P	ECO Label (for Europe)
45	TLABZC586WJZZ	AF		J	QUATTRON Label
46	XBPS730P06WS0	AA		J	Screw (for PWB/Angle), x39
47	XBPS730P10WS0	AA		J	Screw (for Panel Angle), x5
48	XBPS830P06WS0	AA		J	Screw (for Rear Cabinet Ass'y), x17
49	XBPS830P14WS0	AB		J	Screw (for Rear Cabinet Ass'y)
50	XEBS840P10000	AF		J	Screw (for Speaker/Rear Cabinet Ass'y), x4
51	PSPAGA888WJZZ	AB		J	Spacer, x4
52	PSPAZC492WJKZ	AC		J	Spacer, x2
53	PSPAGA931WJKZ	AD		P	Spacer, x2
54	PSPAGA933WJKZ	AC		P	Spacer, x2
55	PSPAGA892WJKZ	AD		J	Spacer
56	LANGFA776WJFW	AK		J	BL Chassis Support Angle
57	PZETKA563WJKZ	AF		P	Insulation Sheet (AC)
58	PMLT-A578WJZZ	AE		P	Gasket
59	TLABZC638WJZZ	AL	N	P	POP Label
60	LX-NZA049WJFN	AC	N	J	Hexagon Nut
61	TLABZC453WJZZ	AA		P	Panel Label
62	LHLDW1033CE00	AA		J	Wire Holder
63	RCORF0103CEZZ	AK		J	Ferrite Core
64	RCORFA020WJZZ	AN		J	Core (for AC Cord)
65	RCORFA023WJZZ	AK		J	Core
66	GCABBB699WJSA			P	Rear Cabinet
67	HiNDPD710WJSA	AF		P	Terminal Label (Side)
68	HiNDPD727WJSA	AD		P	Terminal Label (Bottom)
69	PSPAHC152WJ1Z	AA		P	Himelon
70	PSPAZC461WJZZ	AE		J	Spacer
71	PZETKA569WJKZ	AZ	N	P	Insulation Sheet
72	PSPAHC159WJZZ	AB		P	Spacer
73	PSPAHC160WJZZ	AC		J	Spacer
74	PSPAHC194WJZZ	AB	N	P	Spacer, x4

[7] SUPPLIED ACCESSORIES

X8
Remote Control Unit (x 1)

X17
AAA size alkaline battery (x 2)

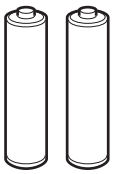

X4
Cable Clamp (x 1)

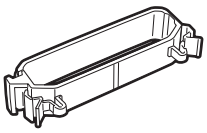

X6
RGB Component Cable (x 1)

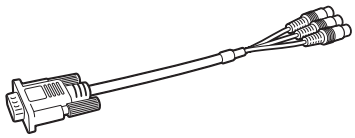

X5
SCART Cable (x 1)

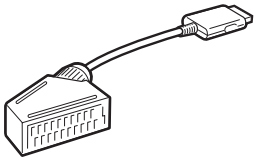

X7
AV Cable (x 1)

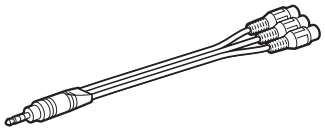

X2
Stand Unit (x 1)

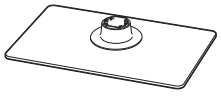

X1
Stand Support Ass'y

X3
Stand Screw Ass'y

X18
Wireless LAN USB Adapter
(WN8522B) (x 1)

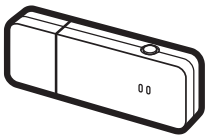

X14 X15 X16
Operation Manual

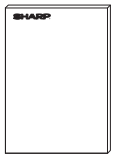

NO.	PARTS CODE	PRICE RANK	NEW MARK	PART DELIVERY	DESCRIPTION
[7] SUPPLIED ACCESSORIES					
X1	CANGKC707WJ01	AY		J	Stand Support Ass'y (LC-40LE814E/RU)(LC-40LE824E/RU)
X1	CANGKC708WJ01	AX		J	Stand Support Ass'y (LC-46LE814E/RU)(LC-46LE824E/RU)
X2	CDAi-A709WJ04	BL	N	P	Stand Unit (LC-40LE814E/RU)(LC-40LE824E/RU)
X2	CDAi-A710WJ04	BN	N	P	Stand Unit (LC-46LE814E/RU)(LC-46LE824E/RU)
X3	CX-BZA363WJ01	AF		J	Stand Screw Ass'y
X4	LHLDWA298WJKA	AD	N	J	Cable Clamp
X5	QCNWGA158WJPZ	AU		P	SCART Cable
X6	QCNWGA159WJPZ	AN		P	RGB Component Cable
X7	QCNWGA160WJPZ	AM		J	AV Cable
X8	RRMCGA906WJSA	AW	N	P	Remote Control Unit (LC-40LE814E/RU)(LC-46LE814E/RU)
X8	RRMCGA903WJSA	AW	N	P	Remote Control Unit (LC-40LE824E/RU)(LC-46LE824E/RU)
X9	TCAUSA034WJZZ	AA		P	Caution Card (for Europe)
X10	TCAUZA408WJZZ	AB		P	Caution Card (for Europe)
X11	TGAN-A077WJZZ			P	Warranty Card (for Russia)
X12	TGAN-B078WJZZ	AC		P	Warranty Card (for Europe)
X13	TGAN-B079WJZZ	AB		P	Warranty Card (for Europe)
X14	TiNS-E832WJZZ	AP	N	P	Operation Manual (for Europe)(10Language)
X15	TiNS-E833WJZZ	AN	N	P	Operation Manual (12Language)
X16	TiNS-E915WJZZ	AP	N	P	Operation Manual (for Europe)
X17	Not Available	–		–	AAA size alkaline battery, x2
X18	Ki-OUA001WJZZ	BH	N	P	Wireless LAN USB Adapter

[8] PACKING PARTS (NOT REPLACEMENT ITEM)(LC-40LE814/824E/RU)

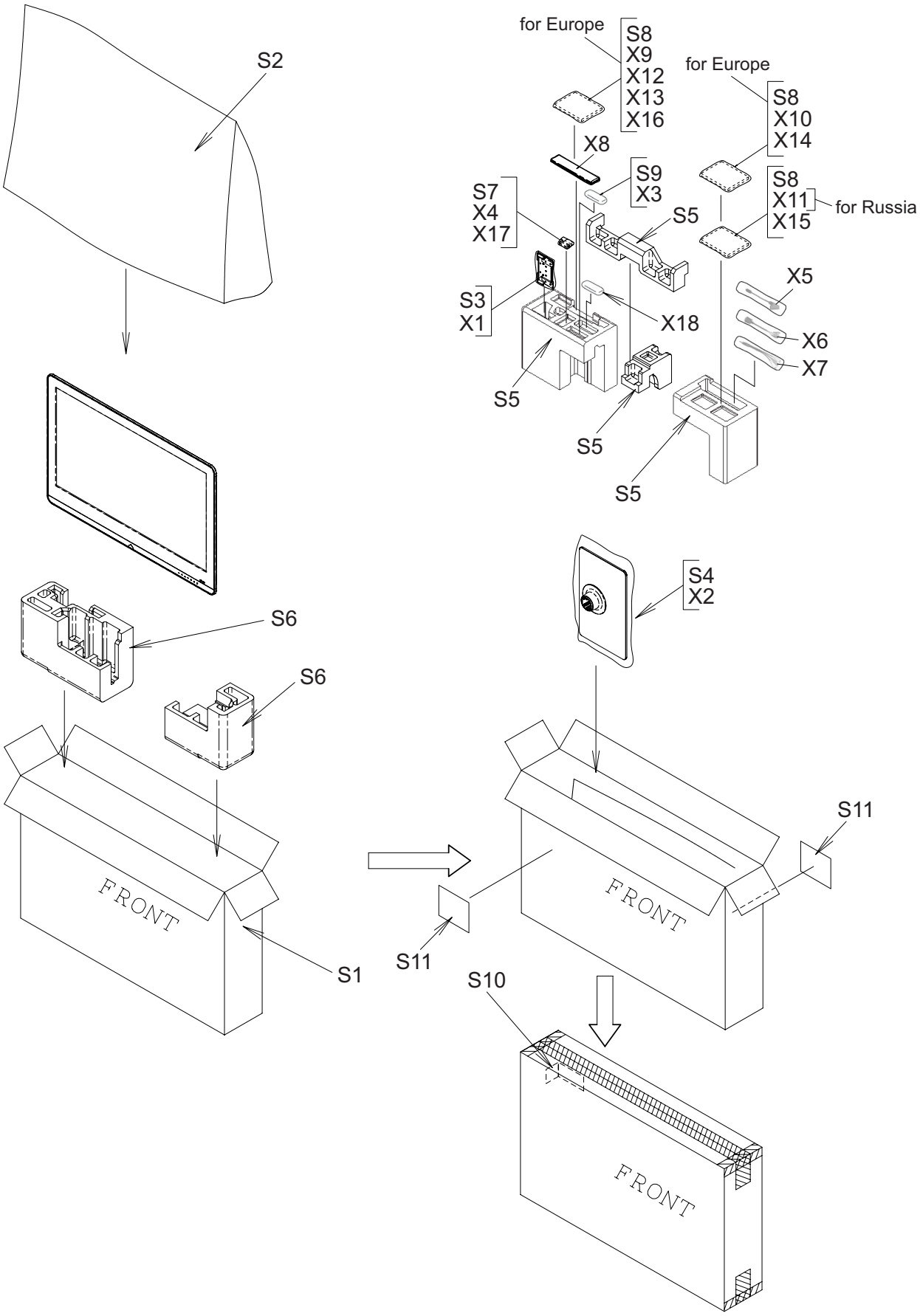

NO.	PARTS CODE	PRICE RANK	NEW MARK	PART DELIVERY	DESCRIPTION
[8] PACKING PARTS (NOT REPLACEMENT ITEM)(LC-40LE814/824E/RU)					
S1	SPAKCF805WJZZ	–		–	Packing Case
S2	SPAKPB475WJZZ	–		–	Wrapping Paper
S3	SPAKPB526WJZZ	–	N	–	Wrapping Paper, x2
S4	SPAKPB528WJZZ	–		–	Wrapping Paper
S5	SPAKXC920WJZZ	–		–	Packing Add. (Top)
S6	SPAKXD105WJZZ	–	N	–	Packing Add. (Bottom)
S7	SSAKAA009WJZZ	–		–	Polyethylene Bag
S8	SSAKAA111WJZZ	–		–	Polyethylene Bag, x3 (for Europe)
S8	SSAKAA111WJZZ	–		–	Polyethylene Bag (for Russia)
S9	SSAKKA008WJZZ	–	N	–	Polyethylene Bag
S10	TLABM5584BMZZ	–		–	Case No Label
S11	TLABZC698WJZZ	–	N	–	P_Q-EISA Label, x2

[9] PACKING PARTS (NOT REPLACEMENT ITEM)(LC-46LE814/824E/RU)

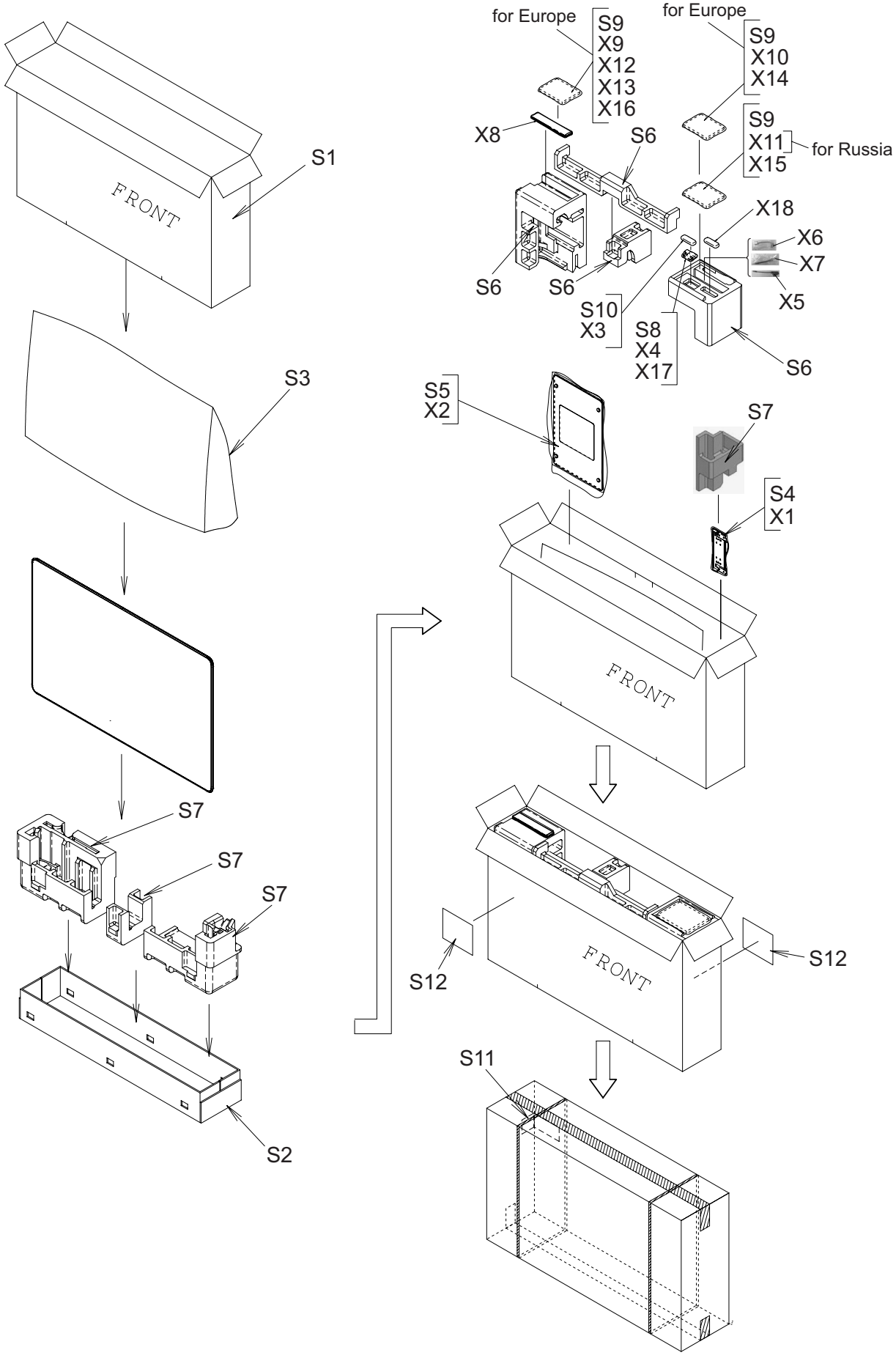

NO.	PARTS CODE	PRICE RANK	NEW MARK	PART DELIVERY	DESCRIPTION
[9] PACKING PARTS (NOT REPLACEMENT ITEM)(LC-46LE814/824E/RU)					
S1	SPAKCF804WJZZ	–		–	Packing Case (Top)
S2	SPAKCF496WJZZ	–		–	Packing Case (Bottom)
S3	SPAKPB477WJZZ	–		–	Wrapping Paper
S4	SPAKPB527WJZZ	–	N	–	Wrapping Paper, x2
S5	SPAKPB529WJZZ	–		–	Wrapping Paper
S6	SPAKXC921WJZZ	–		–	Packing Add. (Top)
S7	SPAKXD106WJZZ	–	N	–	Packing Add. (Bottom)
S8	SSAKAA009WJZZ	–		–	Polyethylene Bag
S9	SSAKAA111WJZZ	–		–	Polyethylene Bag, x3 (for Europe)
S9	SSAKAA111WJZZ	–		–	Polyethylene Bag (for Russia)
S10	SSAKKA008WJZZ	–	N	–	Polyethylene Bag
S11	TLABM5584BMZZ	–		–	Case No Label
S12	TLABZC698WJZZ	–	N	–	P_Q-EISA Label, x2
[10] SERVICE JIGS (USE FOR SERVICING)					
N	QCNW-G616WJQZ	BK		J	Main Unit to LCD Control Unit (LW)
N	QCNW-G625WJQZ	AP		J	LCD Control Unit to Power Unit (PL)
N	QCNW-H184WJQZ	AX		J	Main Unit to Power Unit (PD)
N	QCNW-H185WJQZ	AV		J	Main Unit to Power Unit (LB)
N	QCNW-K594WJQZ		N	J	Main Unit to R/C, LED Unit (RA)
N	QCNW-K595WJQZ		N	J	Main Unit to Speaker (SP)
N	QCNW-K596WJQZ		N	J	Main Unit to LOGO Unit (RL) (LC-40LE824E/RU)(LC-46LE824E/RU)
N	QCNW-K597WJQZ		N	J	Main Unit to Woofer (SB)

SHARP

COPYRIGHT © 2010 BY SHARP CORPORATION

ALL RIGHTS RESERVED.

No part of this publication may be reproduced,
stored in a retrieval system, or transmitted in
any form or by any means, electronic, mechanical,
photocopying, recording, or otherwise, without
prior written permission of the publisher.

Aug. 2010
SH. KD

SHARP CORPORATION
AV Systems Group
CS Promotion Center
Yaita, Tochigi 329-2193, Japan